RENAULT

5 Mechanisms and accessories

51A SIDE OPENING ELEMENT MECHANISMS

52A NON-SIDE OPENING ELEMENT MECHANISMS

54A WINDOWS

55A EXTERIOR PROTECTION

56A EXTERIOR EQUIPMENT

57A INTERIOR EQUIPMENT

59A SAFETY ACCESSORIES

X95

APRIL 2009 **Edition Anglaise**

"The repair methods given by the manufacturer in this document are based on the technical specifications current when it was prepared.

The methods may be modified as a result of changes introduced by the manufacturer in the production of the various component units and accessories from which his vehicles are constructed."

All copyrights reserved by Renault.

The reproduction or translation in part of whole of the present document, as well as the use of the spare parts reference numbering system, are prohibited without the prior written consent of Renault.

© Renault s.a.s 2008

MEGANE III - Section 5

Contents

Page

51A SIDE OPENING ELEMENT MECHANISMS

Front side door check strap: Removal - Refitting 51A-1

Front side door lock: Removal - Refitting 51A-2

Front side door lock barrel: Removal - Refitting 51A-4

Door exterior handle: Removal - Refitting 51A-6

Front side door electric window mechanism: Removal - Refitting 51A-8

Rear side door lock: Removal - Refitting 51A-10

Rear side door electric window mechanism: Removal - Refitting 51A-13

Rear side door manual window control mechanism: Removal - Refitting 51A-16

Front side door glass run channel mounting: Removal - Refitting 51A-19

Rear side door check strap: Removal - Refitting 51A-21

52A NON-SIDE OPENING ELEMENT MECHANISMS

Bonnet latch: Removal - Refitting 52A-1

Bonnet release cable: Removal - Refitting 52A-2

Tailgate lock: Removal - Refitting 52A-5

Tailgate balancer: Removal - Refitting 52A-7

Sunroof operating mechanism: Removal - Refitting 52A-8

Sunroof moving panel: Removal - Refitting 52A-12

Sunroof deflector: Removal - Refitting 52A-15

Sunroof sun visors: Removal - Refitting 52A-18

Fixed glass roof: Removal - Refitting 52A-20

Fixed glass sunroof visor: Removal - Refitting 52A-23

54A WINDOWS

Windscreen: Removal - Refitting 54A-1

Sliding window in front side door: Removal - Refitting 54A-3

Contents

54A WINDOWS

Sliding window in rear side door: Removal - Refitting 54A-7

Rear quarter panel window: Removal - Refitting 54A-10

Rear side door fixed window: Removal - Refitting 54A-14

Rear screen: Removal - Refitting 54A-16

Fixed sunroof window: Removal - Refitting 54A-18

Sunroof side trim: Removal - Refitting 54A-21

55A EXTERIOR PROTECTION

Front bumper: Removal - Refitting 55A-1

Front bumper: Stripping - Rebuilding 55A-6

Front bumper: Conversion 55A-11

Rear bumper: Removal - Refitting 55A-12

Rear bumper: Stripping- Rebuilding 55A-16

Tailgate strip: Removal - Refitting 55A-18

Front side door moulding: Removal - Refitting 55A-20

Rear side door moulding: Removal - Refitting 55A-22

Rear wing protective strip: Removal - Refitting 55A-23

Front wheel arch liner: Removal - Refitting 55A-24

Rear wheel arch liner: Removal - Refitting 55A-27

A-pillar trim piece: Removal - Refitting 55A-29

55A EXTERIOR PROTECTION

Front side door pillar exterior trim Removal - Refitting 55A-31

Rear side door pillar exterior trim Removal - Refitting 55A-34

56A EXTERIOR EQUIPMENT

Scuttle panel grille: Removal - Refitting 56A-1

Tailgate spoiler: Removal - Refitting 56A-6

Scoop under scuttle panel grille: Removal - Refitting 56A-8

Door mirror: Removal - Refitting 56A-15

Door mirror casing: Removal - Refitting 56A-17

Door mirror glass: Removal - Refitting 56A-19

Roof rack bar: Removal - Refitting 56A-20

Rear badges: Removal - Refitting 56A-22

57A INTERIOR EQUIPMENT

Dashboard: Removal - Refitting 57A-1

Lower section of dashboard trim: Removal - Refitting 57A-10

Dashboard trim: Removal - Refitting 57A-15

Dashboard air vent: Removal - Refitting 57A-17

Dashboard side air vent: Removal - Refitting 57A-19

Centre front panel: Removal - Refitting 57A-20

Contents

57A INTERIOR EQUIPMENT

Glovebox: Removal - Refitting 57A-25

Glovebox cover: Removal - Refitting 57A-27

Centre console: Removal - Refitting 57A-29

Floor flap and storage: Removal - Refitting 57A-41

Interior rear-view mirror Removal - Refitting 57A-43

Sun visor: Removal - Refitting 57A-45

Grab handle: Removal - Refitting 57A-47

Rear side door sun blind: Removal - Refitting 57A-48

Underseat flap and storage: Removal - Refitting 57A-49

59A SAFETY ACCESSORIES

Passenger presence detection ply: Removal - Refitting 59A-1

REMOVAL

I - REMOVAL PREPARATION OPERATION

❑ Remove:

- the front side door trim (see **Front side door trim: Removal - Refitting**) (72A, Side opening element trim),
- the front speaker (see **Front speakers: Removal - Refitting**) (86A, Radio).

II - OPERATION FOR REMOVAL OF PART CONCERNED

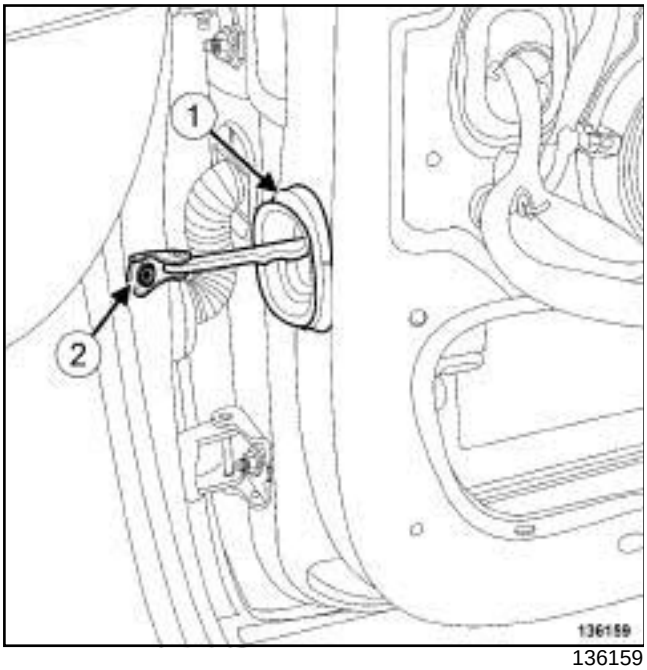

136159

❑ Remove:

- the front side door check strap seal (**1**) ,
- the bolt (**2**) .

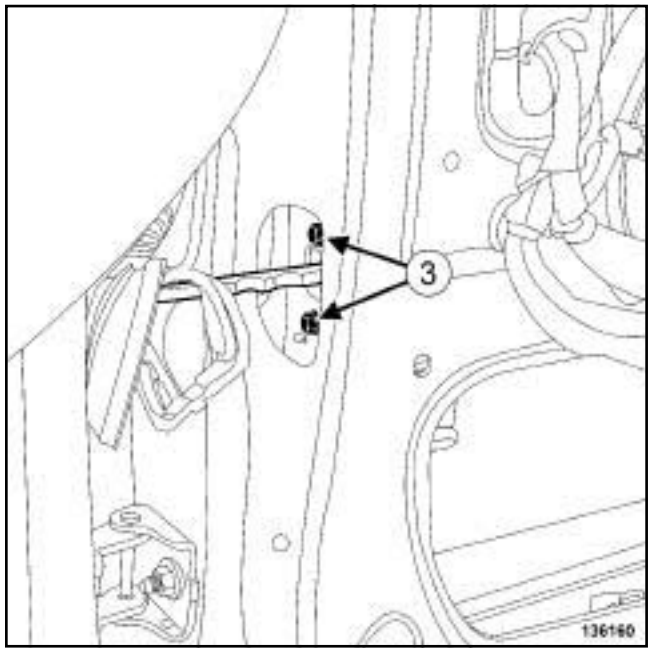

136160

❑ Remove:

- the bolts (**3**) ,
- the front side door check strap from inside the front side door box section.

REFITTING

I - REFITTING OPERATION FOR PART CONCERNED

❑ Refit:

- the front side door check strap through the inside of the front side door box section,
- the bolts ***(3)*** ,
- the bolt ***(2)*** ,
- the front side door check strap seal ***(1)*** .

II - FINAL OPERATION

❑ Refit:

- the front speaker (see **Front speakers: Removal - Refitting**) (86A, Radio),
- the front side door trim (see **Front side door trim: Removal - Refitting**) (72A, Side opening element trim).

Tightening torques ▽	
front side door lock bolts	**8 N.m**

REMOVAL

I - REMOVAL PREPARATION OPERATION

❑ Disconnect the battery (see **Battery: Removal - Refitting**) (80A, Battery).

❑ Remove:

- the front side door trim (see **Front side door trim: Removal - Refitting**) (72A, Side opening element trim),
- the door sealing film (see **Door sealing film: Removal - Refitting**) (65A, Opening element sealing),
- the front side door lock barrel (see **51A**, **Side opening element mechanisms**, **Front side door lock barrel: Removal - Refitting**, page **51A-4**) ,
- the front side exterior door handle (see **51A**, **Side opening element mechanisms**, **Door exterior handle: Removal - Refitting**, page **51A-6**) .

❑ Protect the side impact sensor to prevent any accidental damage (cardboard and adhesive tape).

II - OPERATION FOR REMOVAL OF PART CONCERNED

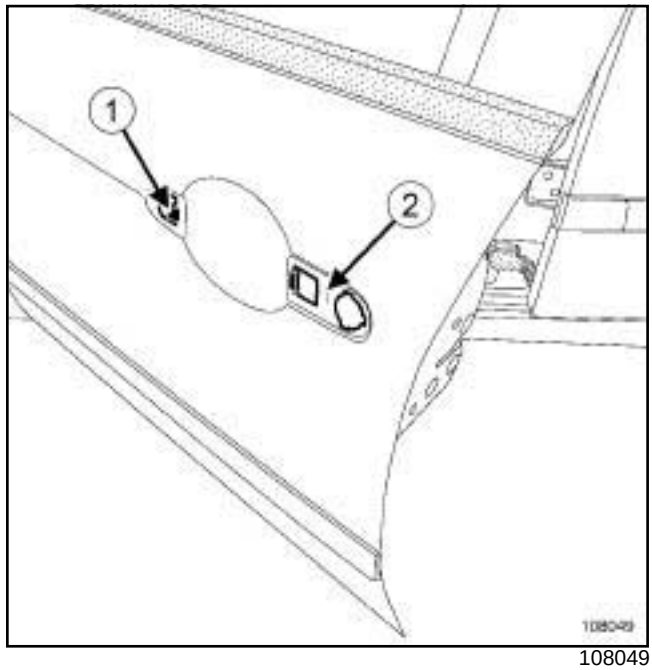

108049

❑ Remove:

- the bolt (**1**) ,
- the seal (**2**) .

❑ Unclip the front side door exterior handle module.

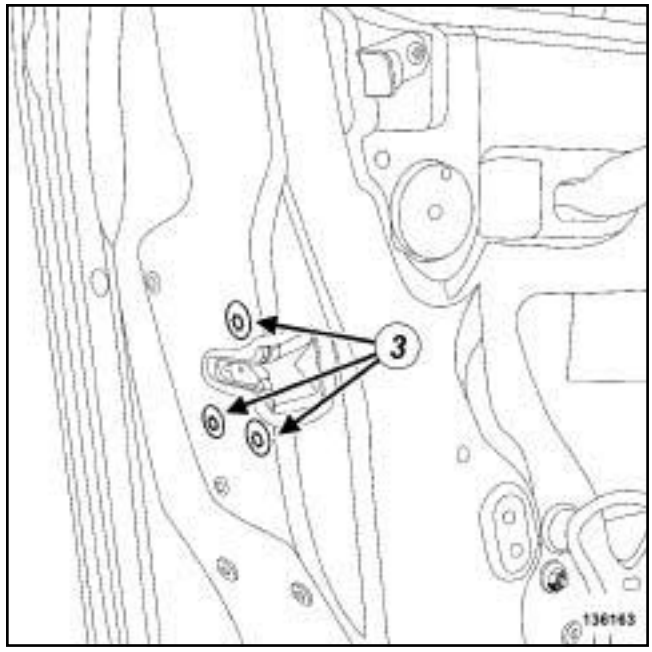

136163

❑ Remove the bolts (**3**) .

- ❑ Gently lift the front side door lock to remove it from the retaining hook.
- ❑ Remove the front side door « lock - exterior door handle module » assembly.
- ❑ Disconnect the connectors.
- ❑ Unclip the cable from the front side door exterior handle module lock.

REFITTING

I - REFITTING OPERATION FOR PART CONCERNED

- ❑ Clip the lock cable onto the front side door exterior handle module.
- ❑ Connect the connectors.
- ❑ Refit the front side door « lock - exterior door handle module » assembly.
- ❑ Position the lock on the front side door box section retaining hook.
- ❑ Refit the front window guide bolts.

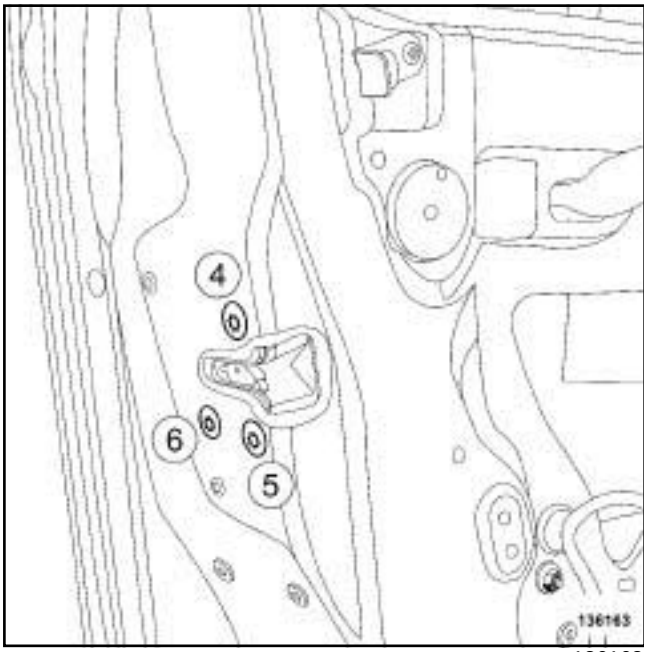

136163

- ❑ Refit the front side door lock bolts ***(3)*** in the order (**4**) , (**5**) and (**6**) .
- ❑ Torque tighten the **front side door lock bolts (8 N.m)**.
- ❑ Clip on the front side door exterior handle module.
- ❑ Refit:
  - the seal,
  - the bolt.

II - FINAL OPERATION

- ❑ Refit:
  - the front side exterior door handle (see **51A**, **Side opening element mechanisms**, **Door exterior handle: Removal - Refitting**, page **51A-6**) ,
  - the front side door lock barrel (see **51A**, **Side opening element mechanisms**, **Front side door lock barrel: Removal - Refitting**, page **51A-4**) .
- ❑ Connect the battery (see **Battery: Removal - Refitting**) (80A, Battery).
- ❑ Carry out a function test.
- ❑ Remove the side impact sensor protection,
- ❑ Refit new door sealing film (see **Door sealing film: Removal - Refitting**) (65A, Opening element sealing).
- ❑ Carry out a sealing test (see **Technical Note 0653A**).
- ❑ Refit the front side door trim (see **Front side door trim: Removal - Refitting**) (72A, Side opening elements trim).

Essential special tooling	
Car. 1904	Tool for removing and refitting door lock barrels and dummy lock barrels

REMOVAL

I - REMOVAL PREPARATION OPERATION

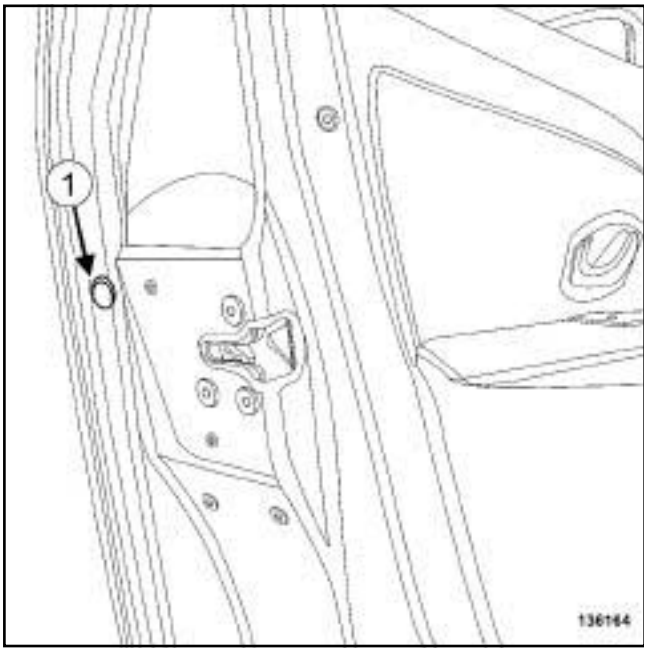

136164

❑ Remove the blanking cover (**1**) to access the front side door lock barrel release mechanism.

II - OPERATION FOR REMOVAL OF PART CONCERNED

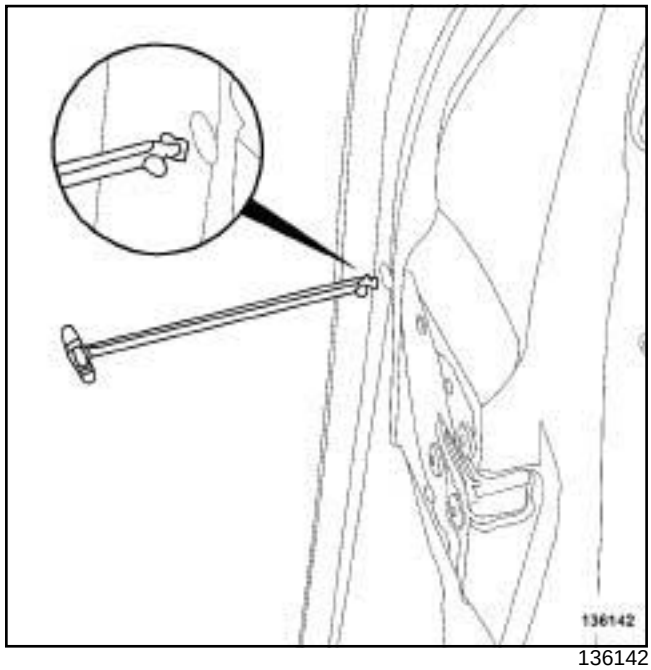

136142

❑ Insert the tool **(Car. 1904)** in the door box section.

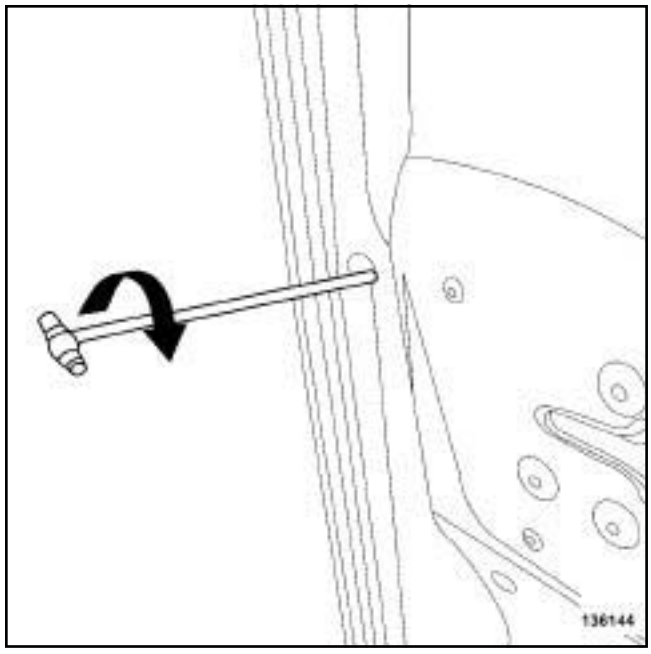

136144

❑ Rotate the tool **(Car. 1904)** a quarter of a turn.

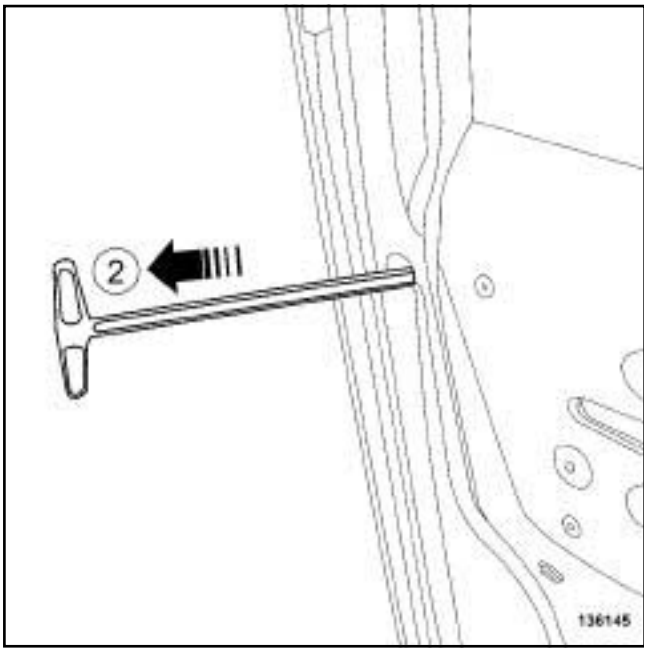

136145

❑ Pull the tool **(Car. 1904)** at (**2**) .

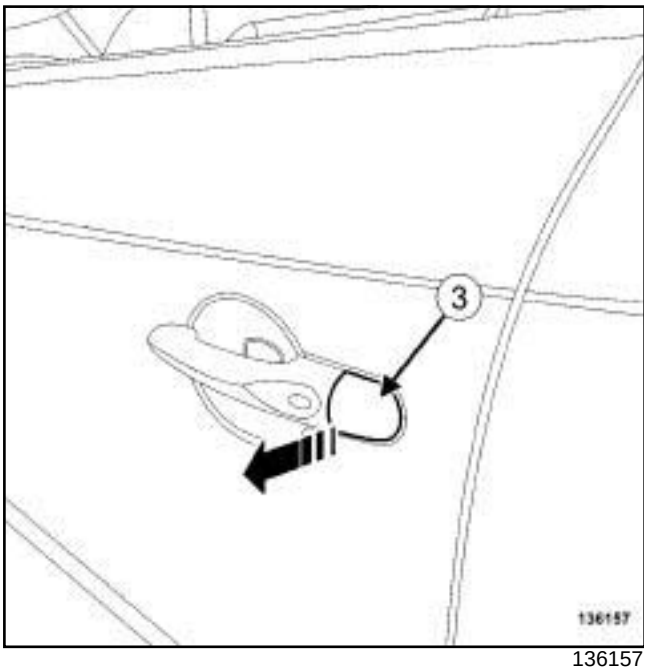

136157

❑ Remove the front side door lock barrel (**3**) .

REFITTING

I - REFITTING OPERATION FOR PART CONCERNED

❑ Refit the front side door lock barrel.

❑ Lock the safety mechanism by pushing it with a screwdriver.

❑ Carry out a function test.

II - FINAL OPERATION

❑ Refit the blanking cover on the front side door lock barrel release mechanism.

REMOVAL

I - REMOVAL PREPARATION OPERATION

❑ Remove the front side door lock barrel or the dummy lock (see **51A**, **Side opening element mechanisms**, **Front side door lock barrel: Removal - Refitting**, page **51A-4**) .

DOOR OPEN SYST. 433 NML

❑ Remove:

- the front side door trim (see **Front side door trim: Removal - Refitting**) (72A, Side opening elements trim),
- the door sealing film (see **Door sealing film: Removal - Refitting**) (65A, Opening element sealing).

II - OPERATION FOR REMOVAL OF PART CONCERNED

DOOR OPEN SYST. 433 NML

❑ Disconnect the door handle connector.

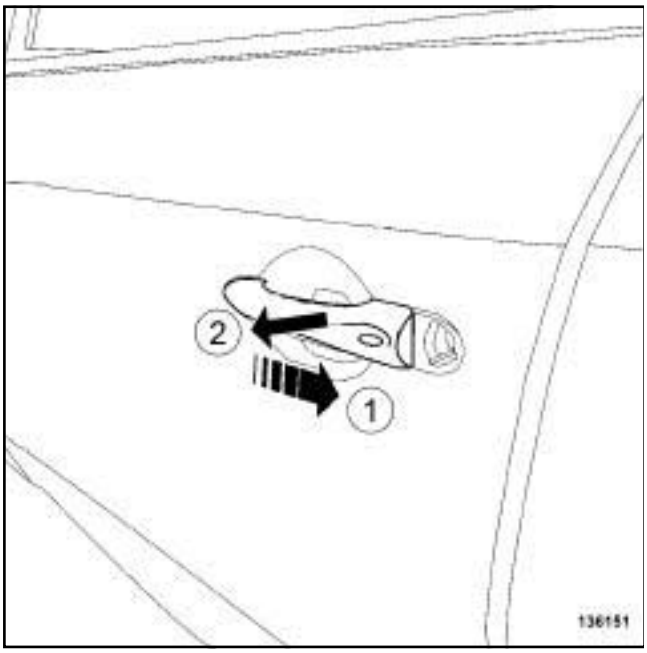

136151

❑ Remove the exterior door handle at (**1**) and (**2**) .

REFITTING

I - REFITTING PREPARATION OPERATION

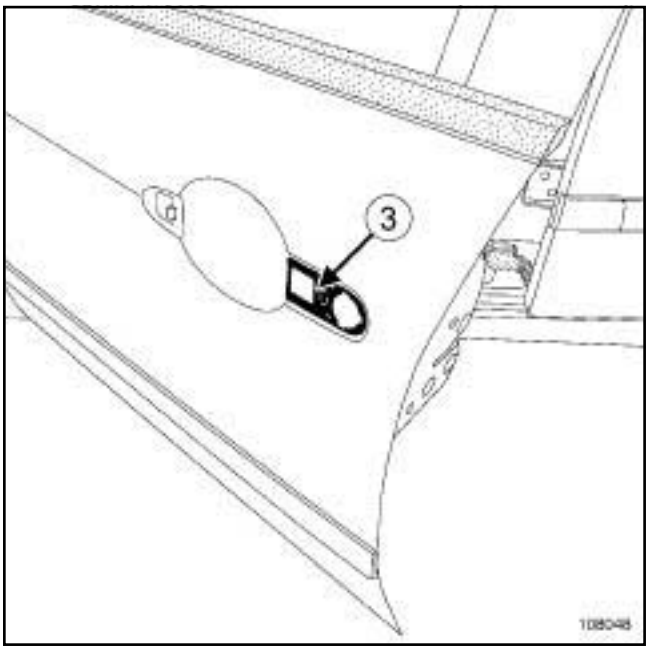

108048

❑ Check the presence and condition of seal (**3**) .

II - REFITTING OPERATION FOR PART CONCERNED

❑ Refit:

- the door exterior handle,
- the front side door lock barrel or the dummy lock (see **51A**, **Side opening element mechanisms**, **Front side door lock barrel: Removal - Refitting**, page **51A-4**) .

DOOR OPEN SYST. 433 NML

❑ Connect the door handle connector.

❑ Perform a function test of the "hands-free" function.

III - FINAL OPERATION

DOOR OPEN SYST. 433 NML

❑ Refit:

- new door sealing film (see **Door sealing film: Removal - Refitting**) (65A, Opening element sealing),

- Carry out a sealing test (see Technical Note 0653A).
- the front side door trim (see **Front side door trim: Removal - Refitting**) (72A, Side opening elements trim).

❑ Carry out a function test.

REMOVAL

I - REMOVAL PREPARATION OPERATION

❑ Disconnect the battery (see **Battery: Removal - Refitting**) (80A, Battery).

❑ Remove:

- the front side door trim (see **Front side door trim: Removal - Refitting**) (72A, Side opening element trim),
- the door sealing film (see **Door sealing film: Removal - Refitting**) (65A, Opening element sealing),
- the front side door sliding window (see **54A**, **Windows**, **Sliding window in front side door: Removal - Refitting**, page **54A-3**) ,
- the electric window motor (see **Window winder motor: Removal - Refitting**) (87D, Electric windows - Sunroof).

❑ Protect the side impact sensor to prevent any accidental damage (card and adhesive).

II - REMOVAL OPERATION FOR PART CONCERNED

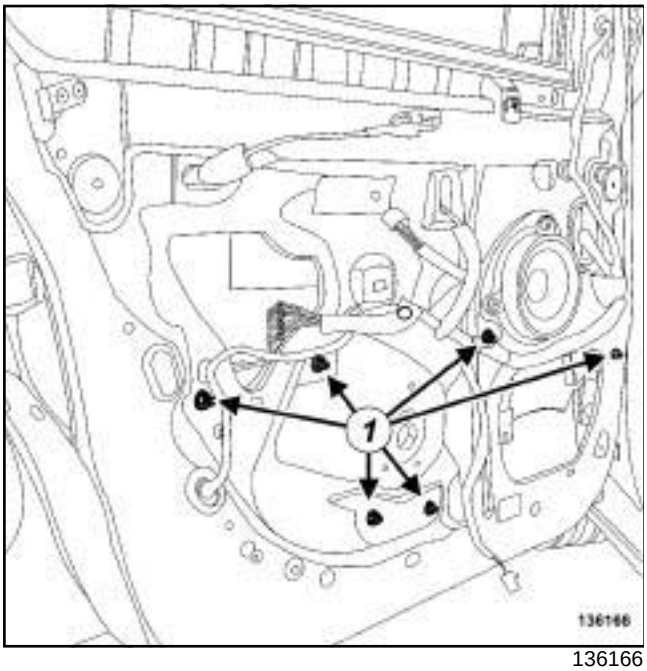

136166

❑ Remove the nuts (**1**) from the front side door electric window mechanism.

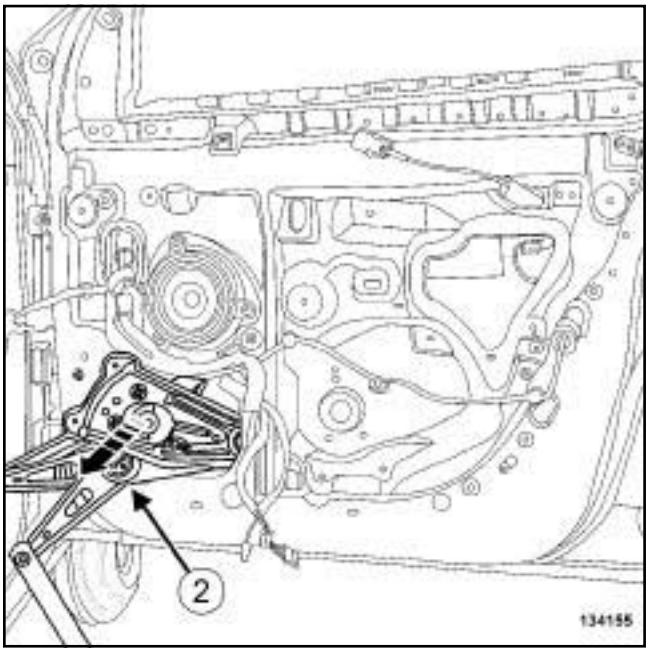

134155

❑ Remove the front side door electric window mechanism (**2**) .

REFITTING

I - REFITTING OPERATION FOR PART CONCERNED

❑ Refit:

- the front side door electric window mechanism,
- the nuts on the front side door electric window mechanism.

II - FINAL OPERATION

- ❑ Refit the electric window motor (see **Window winder motor: Removal - Refitting**) (87D, Electric windows - Sunroof).
- ❑ Connect the battery (see **Battery : Removal - Refitting**) (80A, Battery).
- ❑ Carry out a function test.
- ❑ Remove the side impact sensor protection.
- ❑ Refit:
  - the front side door sliding window (see **54A**, **Windows**, **Sliding window in front side door: Removal - Refitting**, page **54A-3**) ,
  - the door sealing film (see **Door sealing film: Removal - Refitting**) (65A, Opening element sealing).
- ❑ Carry out a sealing test (see **Technical Note 0653A**).
- ❑ Refit the front side door trim (see **Front side door trim: Removal - Refitting**) (72A, Side opening elements trim).

B95 or J95 or K95

Tightening torques ▽	
rear side door lock bolts	**8 N.m**

REMOVAL

I - REMOVAL PREPARATION OPERATION

❑ Remove:

- the rear side door trim (see **Rear side door trim: Removal - Refitting**) (72A, Side opening element trim),
- the door sealing film (see **Door sealing film: Removal - Refitting**) (65A, Opening element sealing),
- the dummy lock (see **51A**, **Side opening element mechanisms**, **Front side door lock barrel: Removal - Refitting**, page **51A-4**) ,
- the rear side exterior door handle (see **51A**, **Side opening element mechanisms**, **Door exterior handle: Removal - Refitting**, page **51A-6**) .

II - OPERATION FOR REMOVAL OF PART CONCERNED

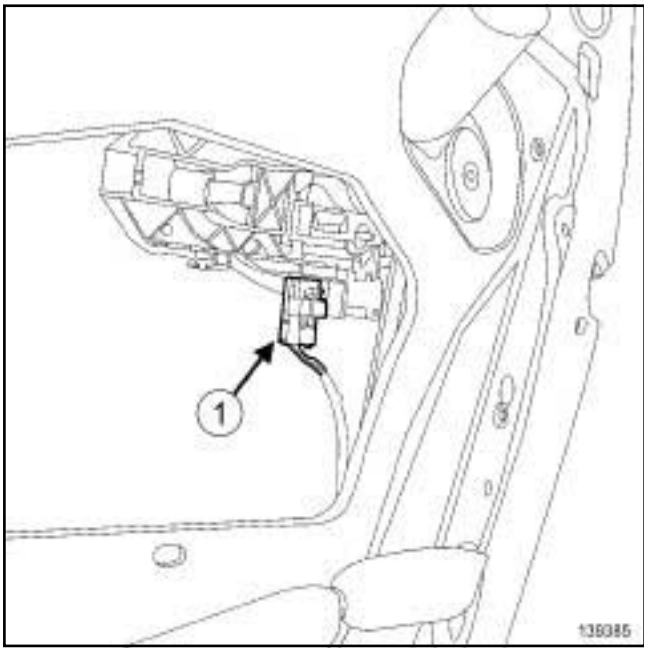

139385

❑ Disconnect the lock module connector (**1**) .

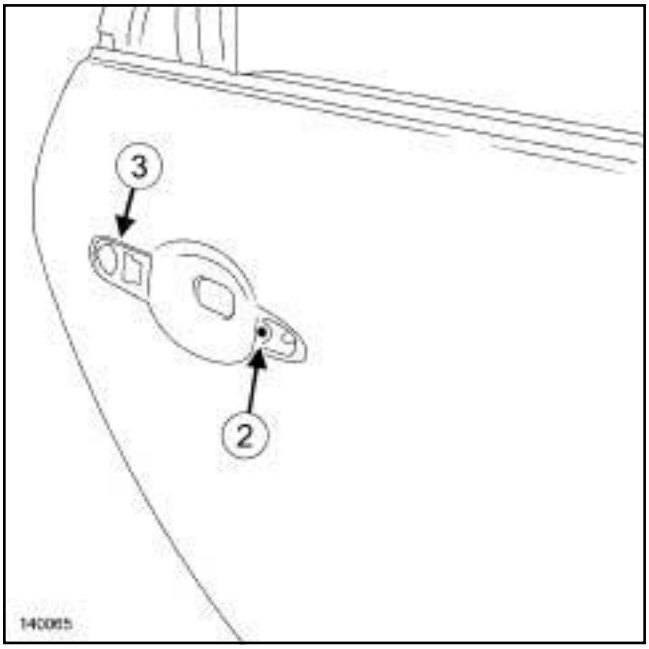

140065

❑ Remove:

- the bolt (**2**) ,
- the seal (**3**) .

❑ Unclip the rear side door exterior handle module.

J95

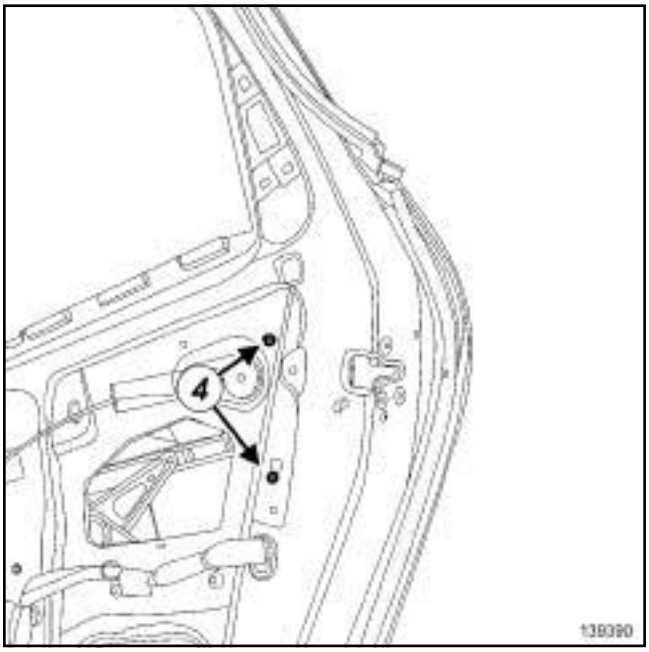

139390

❑ Remove:

- the bolts (**4**) from the slide mounting,

B95 or J95 or K95

- the slide mounting.

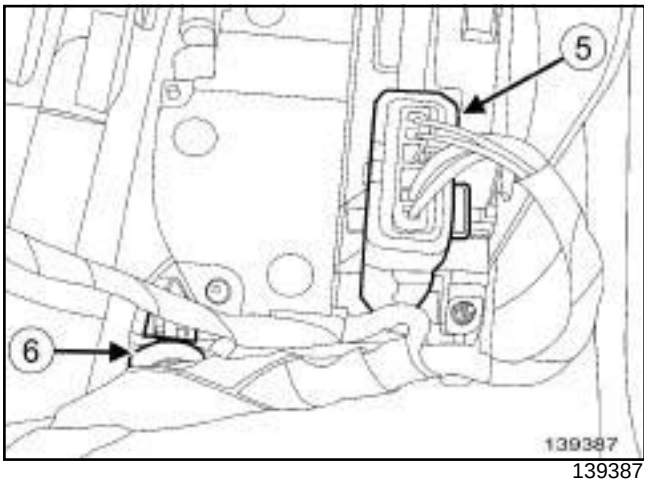

139387

❑ Disconnect the connector (**5**) .

❑ Unclip the wiring at (**6**) .

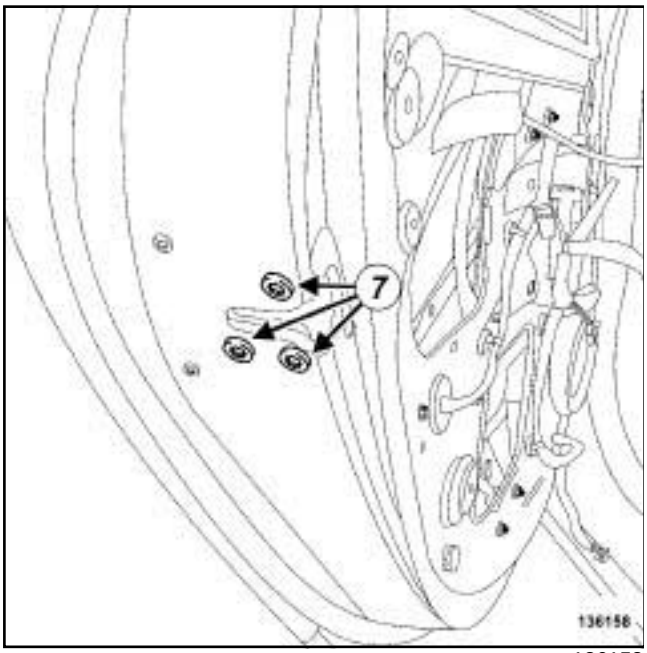

136158

❑ Remove the bolts (**7**) .

❑ Gently lift the rear side door lock to remove it from the retaining hook.

❑ Remove the « lock - exterior rear side door handle module » assembly.

❑ Unclip the cable from the exterior rear side door handle module lock.

REFITTING

I - REFITTING OPERATION FOR PART CONCERNED

❑ Clip the lock cable onto the exterior rear side door handle module.

❑ Refit the « lock - exterior rear side door handle module » assembly.

❑ Position the lock on the rear side door box section retaining hook.

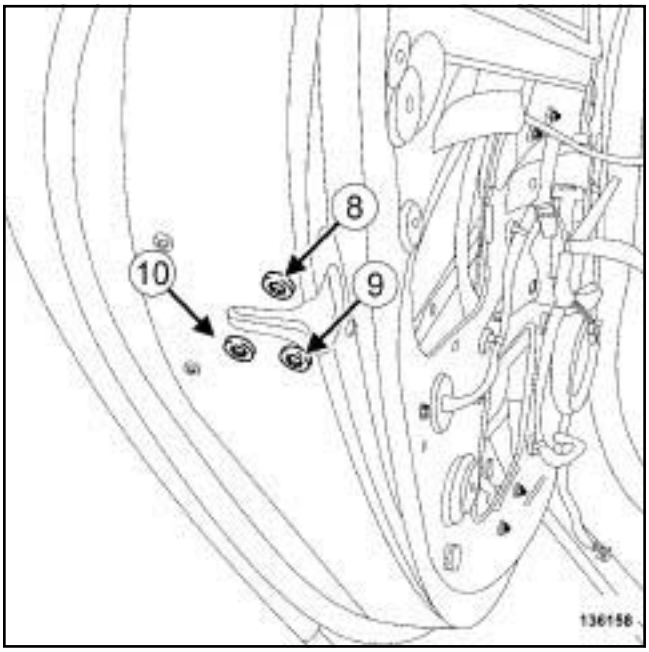

136158

❑ Refit the rear side door lock bolts in the order (**8**) , (**9**) and (**10**) .

❑ Torque tighten the **rear side door lock bolts (8 N.m)**.

❑ Connect the connector ***(5)*** .

❑ Attach the wiring.

J95

❑ Refit:

- the slide mounting,

- the bolts (**4**) on the slide mounting.

B95 or J95 or K95

- ❑ Clip on the rear side door exterior handle module.
- ❑ Refit:
  - the seals ***(3)*** ,
  - the bolt ***(2)*** .
- ❑ Connect the lock module connector ***(1)*** .

II - FINAL OPERATION

- ❑ Refit:
  - the rear side exterior door handle (see **51A**, **Side opening element mechanisms**, **Door exterior handle: Removal - Refitting**, page **51A-6**) ,
  - the dummy lock (see **51A**, **Side opening element mechanisms**, **Front side door lock barrel: Removal - Refitting**, page **51A-4**) .
- ❑ Carry out a function test.
- ❑ Refit the door sealing film (see **Door sealing film: Removal - Refitting**) (65A, Opening element sealing).
- ❑ Carry out a sealing test (see **Technical Note 0653A**).
- ❑ Refit the rear side door trim (see **Rear side door trim: Removal - Refitting**) (72A, Side opening element trim).

B95 or J95 or K95, and REAR ELECTRIC WINDOW+ONE-TOUCH+ANTI-PINCH

REMOVAL

I - REMOVAL PREPARATION OPERATION

❑ Remove:

- the rear side door trim (see **Rear side door trim: Removal - Refitting**) (72A, Side opening element trim),
- the door sealing films (see **Door sealing film: Removal - Refitting**) (65A, Opening elements sealing).

B95

❑ Remove the rear speaker (see **Rear speakers: Removal - Refitting**) (86A, Radio).

❑ Open the rear side door sliding window halfway.

J95

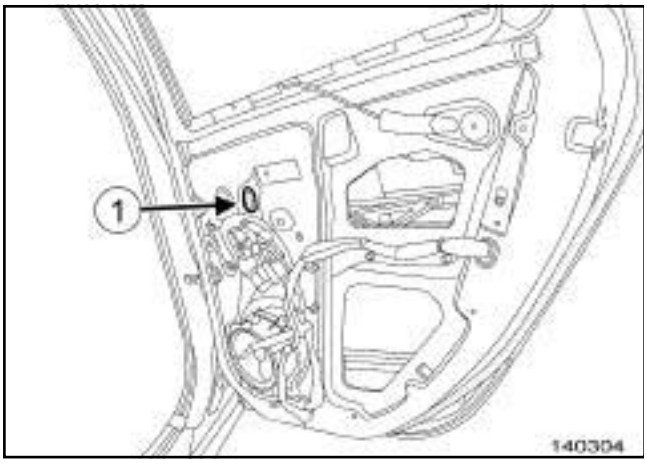

140304

❑ Remove the blanking cover (**1**) .

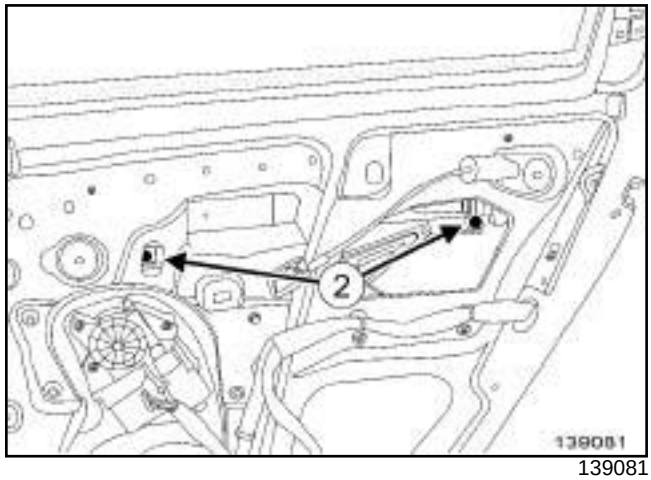

139081

❑ Remove the bolts (**2**) .

B95

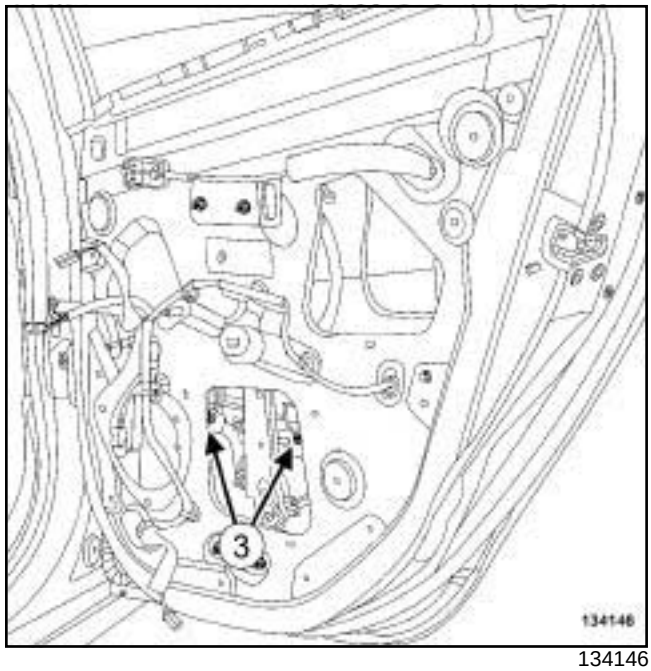

134146

❑ Remove the bolts (**3**) .

❑ Keep the rear side door sliding window in the upper position using masking tape.

❑ Remove the rear side door electric window motor (see **Window winder motor: Removal - Refitting**) (87D, Electric windows - Sunroof).

❑ Unclip the rear side door electric window mechanism cable from inside the door box section.

B95 or J95 or K95, and REAR ELECTRIC WINDOW+ONE-TOUCH+ANTI-PINCH

II - OPERATION FOR REMOVAL OF PART CONCERNED

B95

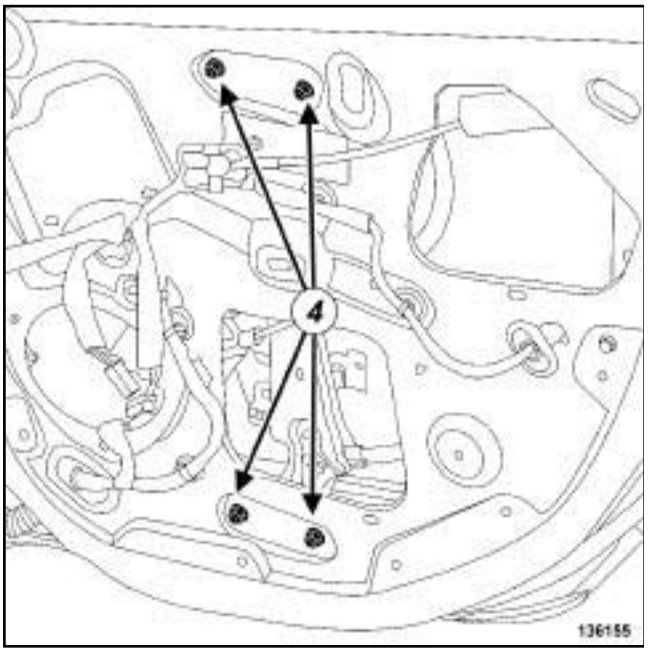

136155

❑ Remove:

- the bolts (**4**) ,
- the rear side door electric window mechanism.

J95

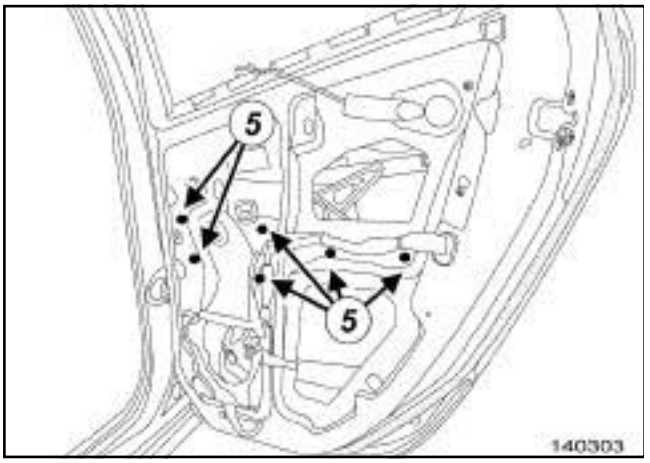

140303

❑ Remove the bolts (**5**) .

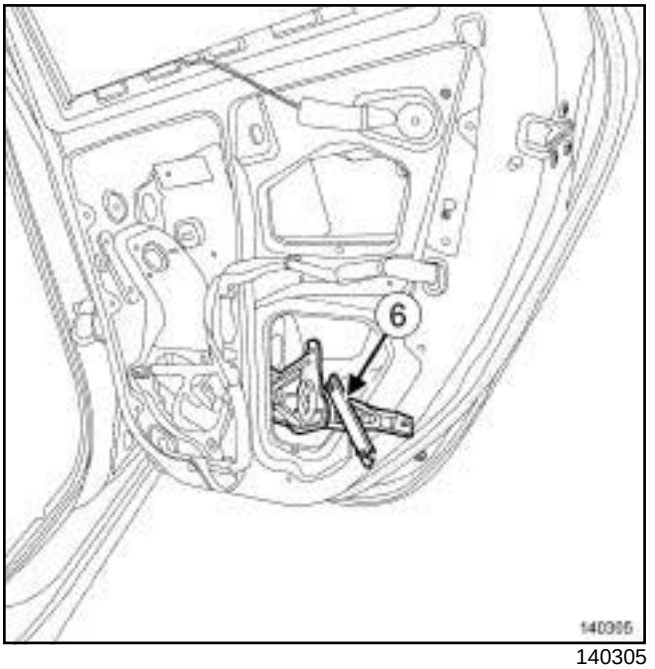

140305

❑ Remove the electric window mechanism (**6**) from inside the rear side door box section.

REFITTING

I - REFITTING PREPARATION OPERATION

❑ **parts always to be replaced: rear side opening element sliding window bolt (50,04,08,07)**.

II - REFITTING OPERATION FOR PART CONCERNED

❑

> Note:
>
> When refitting a new electric window mechanism, a plastic sprocket pre-positions the mechanism for fitting. The sprocket must be removed before refitting the window motor.

❑ Refit the rear side door electric window mechanism.

III - FINAL OPERATION

J95

❑ Refit the blanking cover ***(1)*** .

B95 or J95 or K95, and REAR ELECTRIC WINDOW+ONE-TOUCH+ANTI-PINCH

- ❑ Position the rear side door sliding window.
- ❑ Refit:
  - new bolts ***(2)*** or ***(3)*** ,
  - the electric window motor (see **Window winder motor: Removal - Refitting**) (87D, Electric windows - Sunroof).
- ❑ Clip on the rear side door electric window mechanism wiring.

B95

- ❑ Refit the rear speaker (see **Rear speakers: Removal - Refitting**) (86A, Radio).

- ❑ Carry out a function test.
- ❑ Refit the door sealing films (see **Door sealing film: Removal - Refitting**) (65A, Opening elements sealing).
- ❑ Carry out a sealing test (see **Technical Note 0653A**).
- ❑ Refit the rear side door trim (see **Front side door trim: Removal - Refitting**) (72A, Side opening element trim).

B95 or J95 or K95, and MANUAL REAR WINDOW WINDER

REMOVAL

I - REMOVAL PREPARATION OPERATION

❑ Remove:

- the rear side door trim (see **Rear side door trim: Removal - Refitting**) (72A, Side opening element trim),
- the door sealing films (see **Door sealing film: Removal - Refitting**) (65A, Opening elements sealing).

B95

❑ Remove the rear speaker (see **Rear speakers: Removal - Refitting**) (86A, Radio).

❑ Open the rear side door sliding window halfway.

B95

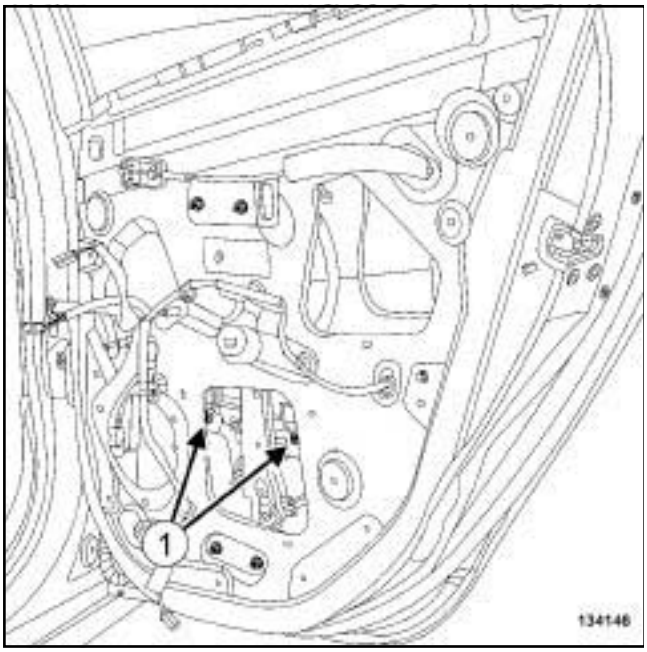

134146

❑ Remove the bolts (**1**) .

J95

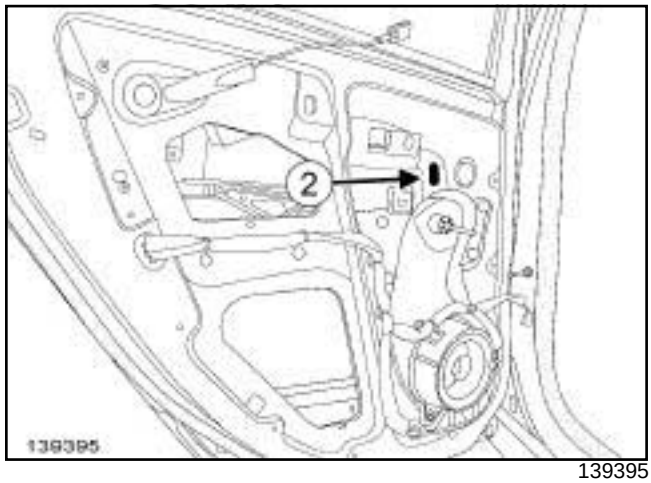

139395

❑ Remove the blanking cover (**2**) .

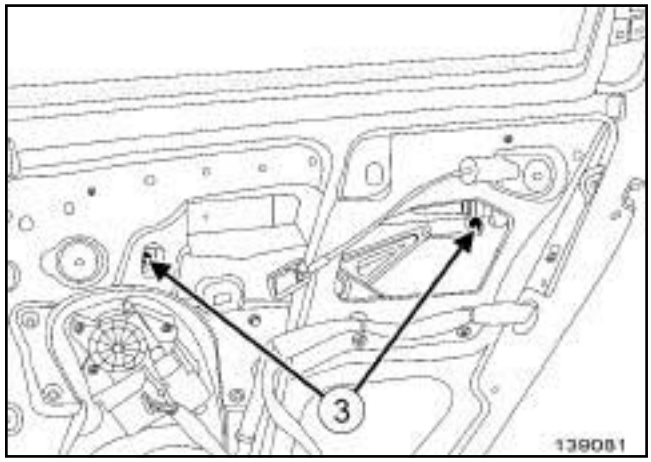

139081

❑ Remove the bolts (**3**) .

❑ Keep the rear side sliding door window in the upper position using masking tape.

B95 or J95 or K95, and MANUAL REAR WINDOW WINDER

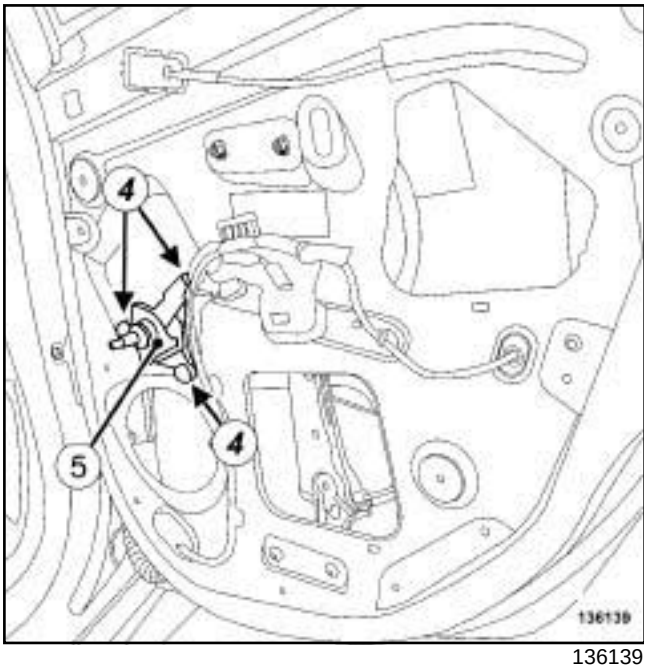

136139

❑ Remove:

- the bolts (**4**) ,
- the rear side door manual window mechanism module (**5**) .

❑ Unclip the cable from the rear side door manual window mechanism from inside the door box section.

II - OPERATION FOR REMOVAL OF PART CONCERNED

B95

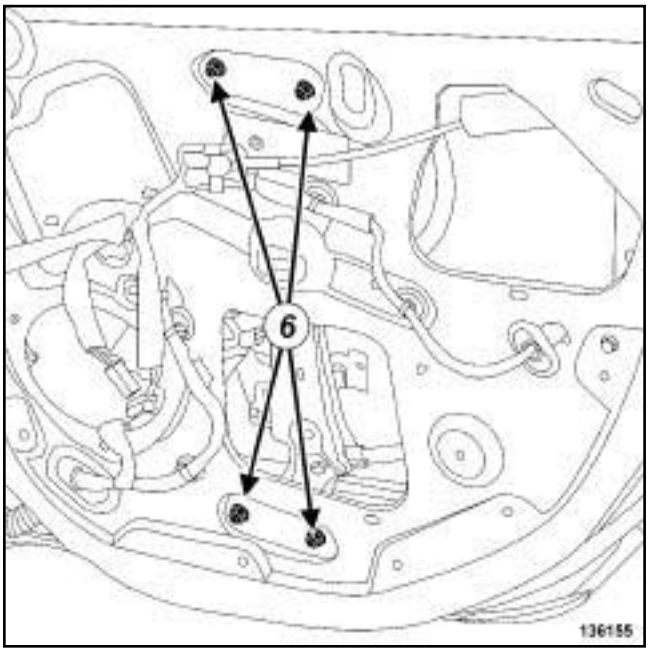

136155

❑ Remove:

- the bolts (**6**) ,
- the rear side door manual window mechanism.

J95

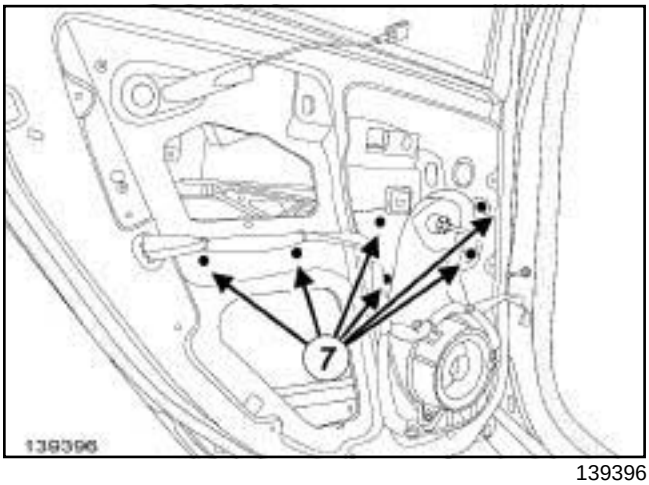

139396

❑ Remove the bolts (**7**) .

B95 or J95 or K95, and MANUAL REAR WINDOW WINDER

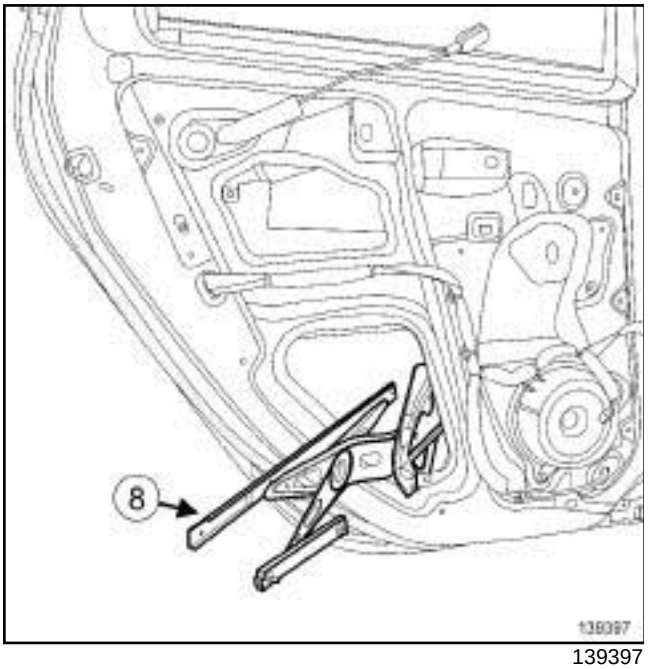

139397

❑ Remove the rear side door manual window mechanism (**8**) from inside the door box section.

REFITTING

I - REFITTING PREPARATION OPERATION

❑

> Note:
>
> When refitting a new window mechanism, a plastic sprocket pre-positions the mechanism for fitting. The sprocket must be removed before refitting the window motor.

❑ **parts always to be replaced: rear side opening element sliding window bolt (50,04,08,07)**.

II - REFITTING OPERATION FOR PART CONCERNED

B95

❑ Refit:

- the rear side door manual window mechanism,
- the bolts ***(6)*** .

J95

❑ Refit:

- the rear side door manual window mechanism,
- the bolts ***(7)*** .

III - FINAL OPERATION

❑ Clip the rear side door manual window mechanism cable inside the door box section.

❑ Refit:

- the rear side door manual window mechanism module ***(5)*** ,
- the bolts ***(4)*** .

❑ Position the rear side door sliding window.

B95

❑ Refit the new bolts ***(1)*** .

J95

❑ Refit:

- the new bolts ***(3)*** .
- the blanking cover ***(2)*** .

❑ Carry out a function test.

❑ Refit the door sealing film (see **Door sealing film: Removal - Refitting**) (65A, Opening element sealing).

❑ Carry out a sealing test (see **Technical Note 0653A**).

B95

❑ Refit the rear speaker (see **Rear speakers: Removal - Refitting**) (86A, Radio).

❑ Refit the rear side door trim (see **Rear side door trim: Removal - Refitting**) (72A, Side opening element trim).

B95 or D95 or J95 or K95

Tightening torques ▽	
front side door run channel support bolts	**6.5 N.m**

REMOVAL

I - REMOVAL PREPARATION OPERATION

❑ Disconnect the battery (see **Battery: Removal - Refitting**) (80A, Battery).

❑ Remove:

- the front side door trim (see **Front side door trim: Removal - Refitting**) (72A, Side opening element trim),
- the lower section of the door sealing film (see **Door sealing film: Removal - Refitting**) (65A, Opening element sealing).

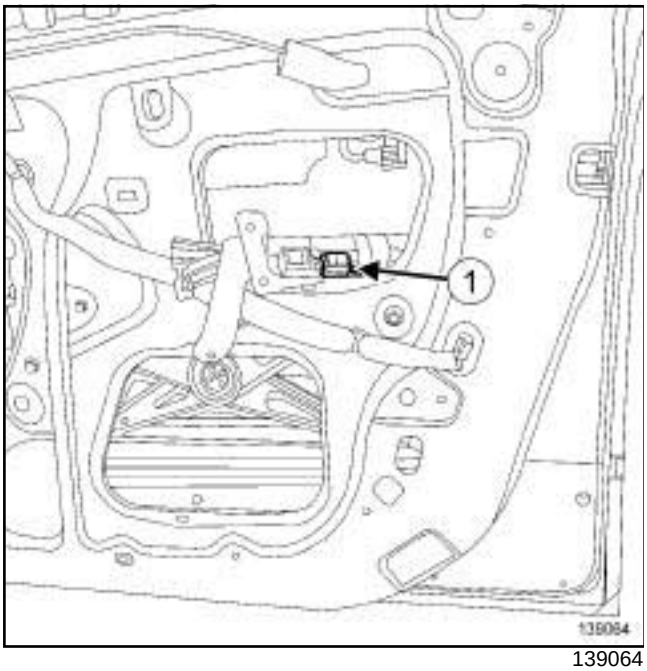

139064

❑ Disconnect the connector (**1**) from the side impact sensor.

II - OPERATION FOR REMOVAL OF PART CONCERNED

❑

> Note:
>
> Handle with care, as the side impact sensor is fitted on the front side door run channel support.

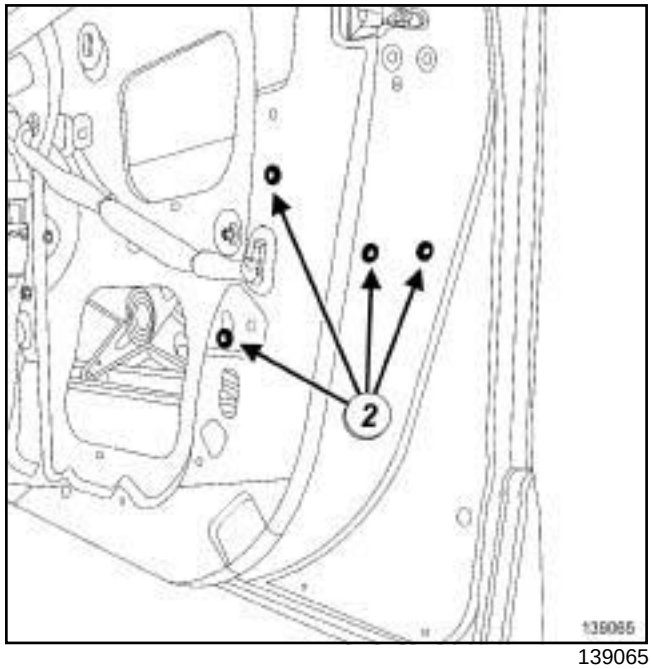

139065

❑ Remove the bolts (**2**) from the front side door run channel support.

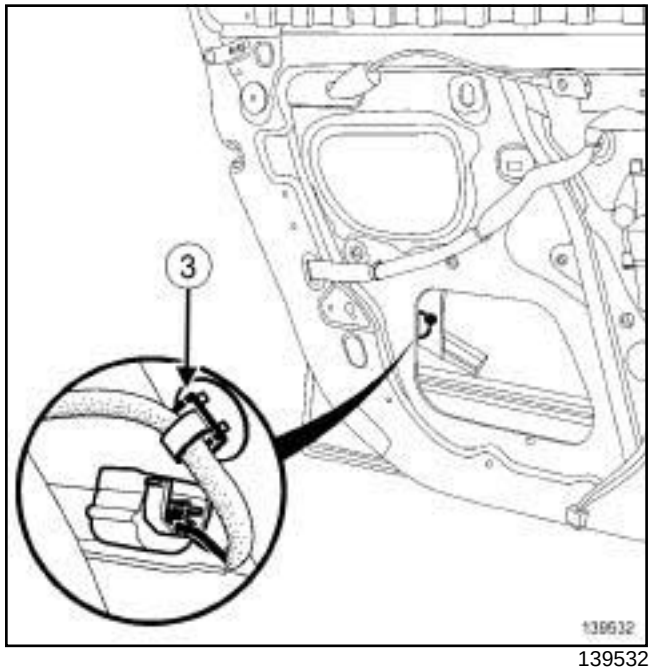

139532

❑ Unclip the side impact sensor wiring (**3**) from the front side door run channel support.

❑ Remove:

- the support of the front side door run channel,
- the side impact sensor (see **Side impact sensor: Removal - Refitting**) (88C, Airbags and pretensioners).

B95 or D95 or J95 or K95

REFITTING

I - REFITTING PREPARATION OPERATION

❑ **parts always to be replaced: Front side opening element run channel mounting bolt (50,02,12,09)**.

II - REFITTING OPERATION FOR PART CONCERNED

❑ Refit:

- the side impact sensor (see **Side impact sensor: Removal - Refitting**) (88C, Airbags and pretensioners),
- the support of the front side door run channel.

❑ Refit the bolts ***(2)*** .

❑ Torque tighten the **front side door run channel support bolts (6.5 N.m)**.

❑ Clip the side impact sensor wiring in place.

III - FINAL OPERATION

❑ Connect the side impact sensor connector ***(1)*** .

❑ Refit:

- the door sealing film (see **Door sealing film: Removal - Refitting**) (65A, Opening element sealing),
- the front side door trim (see **Front side door trim: Removal - Refitting**) (72A, Side opening element trim).

❑ Connect the battery (see **Battery: Removal - Refitting**) (80A, Battery).

B95 or J95 or K95

REMOVAL

I - REMOVAL PREPARATION OPERATION

❑ Remove:

- the rear side door trim (see **Rear side door trim: Removal - Refitting**) (72A, Side opening element trim),
- the rear speaker (see **Rear speakers: Removal - Refitting**) (86A, Radio).

II - OPERATION FOR REMOVAL OF PART CONCERNED

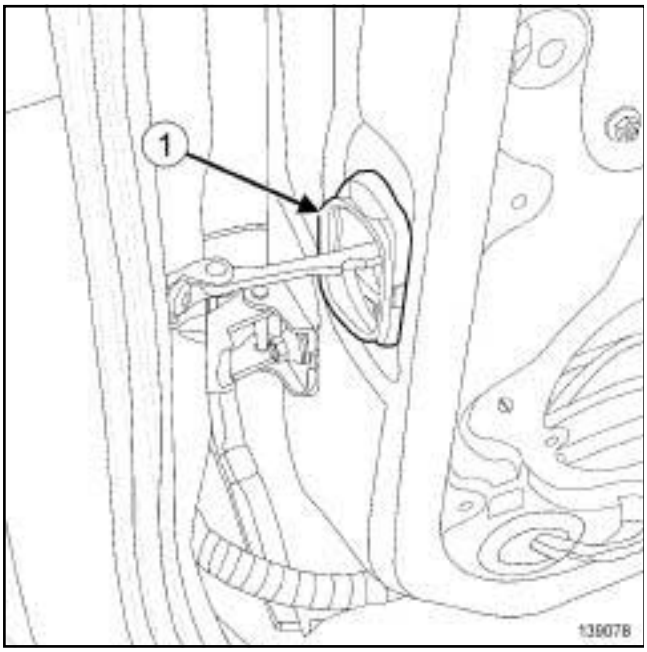

139078

❑ Remove the rear side door check strap seal (**1**) .

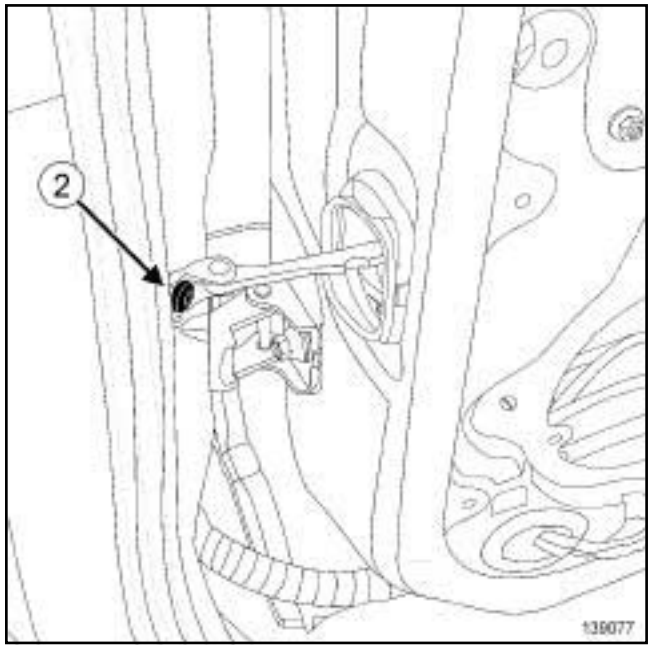

139077

❑ Remove the bolt (**2**) from the rear side door check strap.

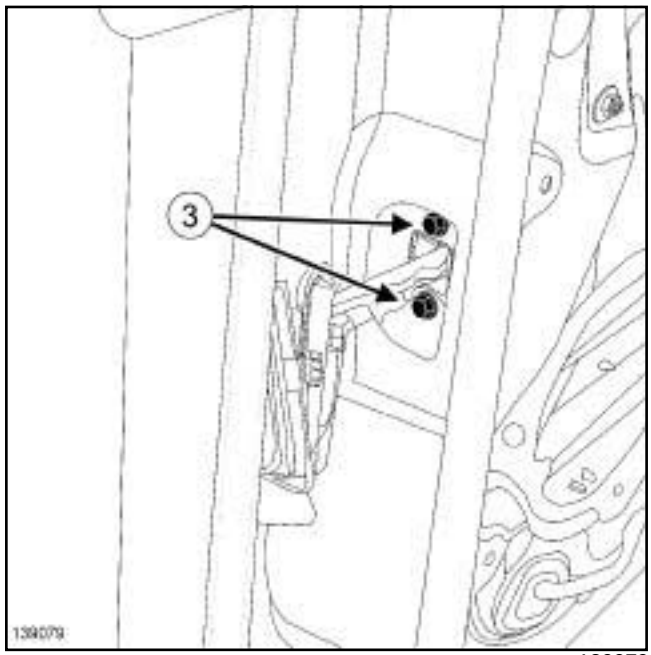

139079

❑ Remove:

- the bolts (**3**) ,
- the rear side door check strap from inside the rear side door box section.

B95 or J95 or K95

REFITTING

I - REFITTING OPERATION FOR PART CONCERNED

❏ Refit:

- the rear side door check strap inside the rear side door box section,
- the bolts ***(3)*** ,
- the bolt ***(2)*** ,
- the rear side door check strap seal ***(1)*** .

II - FINAL OPERATION

❏ Refit:

- the rear speaker (see **Rear speakers: Removal - Refitting**) (86A, Radio),
- the rear side door trim (see **Rear side door trim: Removal - Refitting**) (72A, Side opening element trim).

Tightening torques ▽	
bonnet catch bolts	**8 N.m**

REMOVAL

OPERATION FOR REMOVAL OF PART CONCERNED

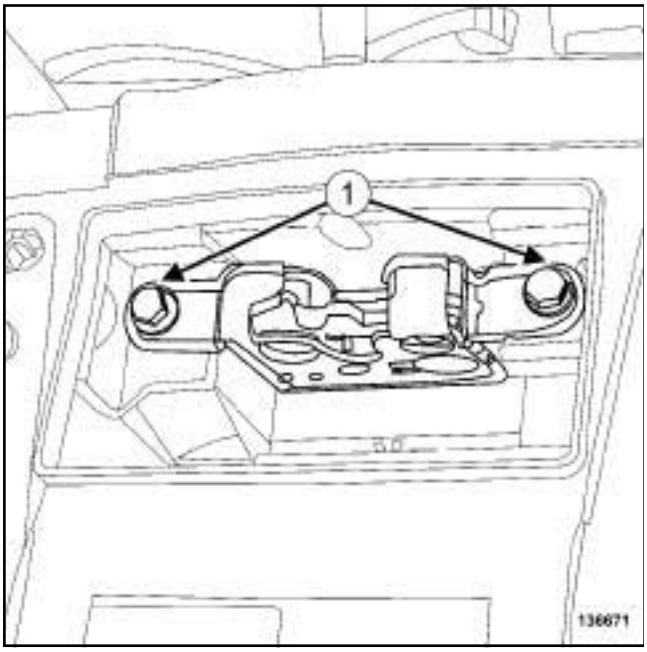

136671

❑ Remove the bonnet lock bolts (**1**) .

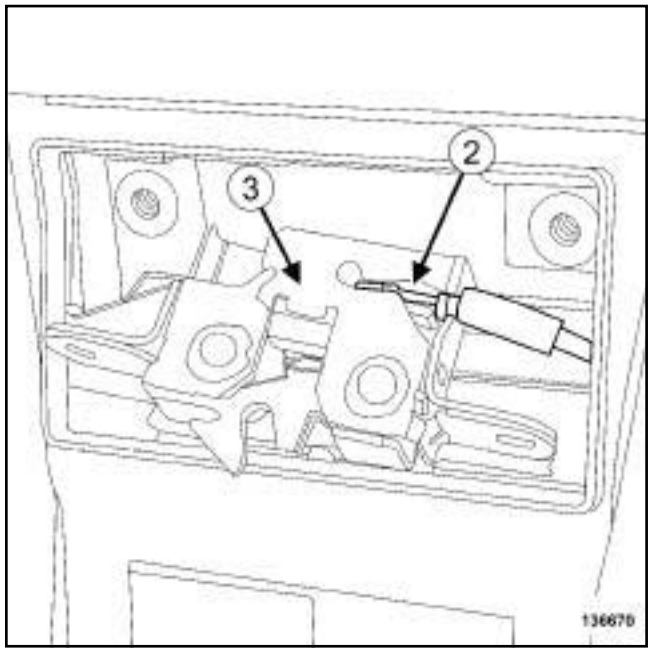

136670

❑ Unclip the bonnet release cable (**2**) .

❑ Remove the bonnet catch (**3**) .

REFITTING

REFITTING OPERATION FOR PART CONCERNED

❑ Clip on the bonnet release cable.

❑ Refit:

- the bonnet catch,
- the bonnet catch bolts.

❑ Carry out a function test.

❑ Adjust the clearances and flush fitting (see **Vehicle clearances: Adjustment values**) (01C, Vehicle bodywork specifications).

❑ Torque tighten the **bonnet catch bolts (8 N.m)**.

REMOVAL

I - REMOVAL PREPARATION OPERATION

❑ Position the vehicle on a two-post lift (see **Vehicle: Towing and lifting**) (02A, Lifting equipment).

❑ Remove:

- the front wheels (see **Wheel: Removal - Refitting**) (35A, Wheels and tyres),
- the front section of the front wheel arch liners (see **55A**, **Exterior protection**, **Front wheel arch liner: Removal - Refitting**, page **55A-24**) ,
- the front bumper (see **55A**, **Exterior protection**, **Front bumper: Removal - Refitting**, page **55A-1**) ,
- the battery (see **Battery: Removal - Refitting**) (80A, Battery),
- the battery tray (see **Battery tray: Removal - Refitting**) (80A, Battery),
- the air filter unit (see **Air filter unit: Removal - Refitting**) (12A, Fuel mixture),
- the bonnet catch (see **52A**, **Non-side opening element mechanisms**, **Bonnet latch: Removal - Refitting**, page **52A-1**) .

D95

❑ Remove the door sill lining (see **Door sill lining: Removal - Refitting**) (71A, Body internal trim).

B95 or J95

❑ Remove:

- the B-pillar lower trim (see **B-pillar lower trim: Removal - Refitting**) (71A, Body internal trim),
- the front sill panel trim (see **Front door sill lining: Removal - Refitting**) (71A, Body internal trim).

B95 or D95

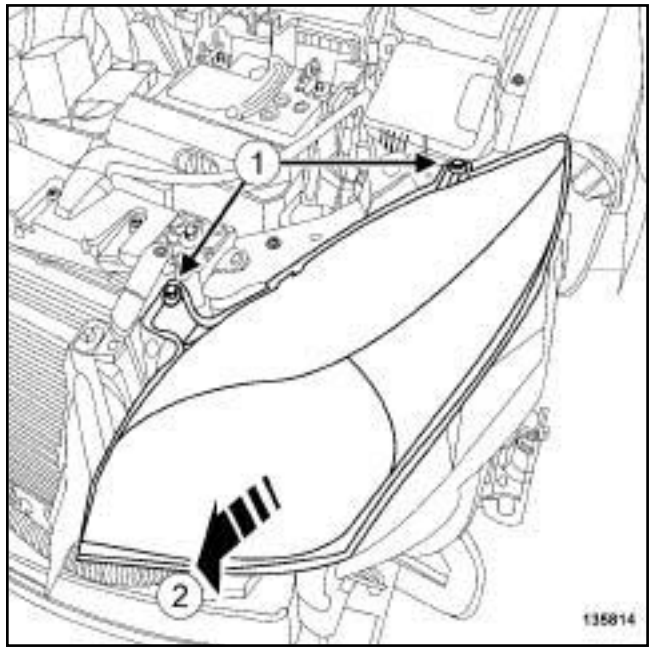

135814

❑ Remove the bolts (**1**) from the headlight.

❑ Slide the headlight at (**2**) .

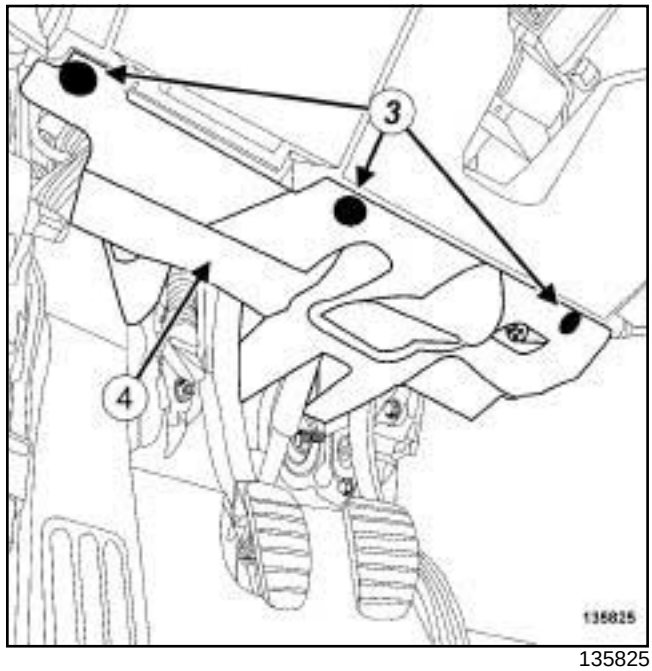

135825

❑ Remove:

- the clips (**3**) ,
- the pedal soundproofing (**4**) .

II - OPERATION FOR REMOVAL OF PART CONCERNED

B95 or D95

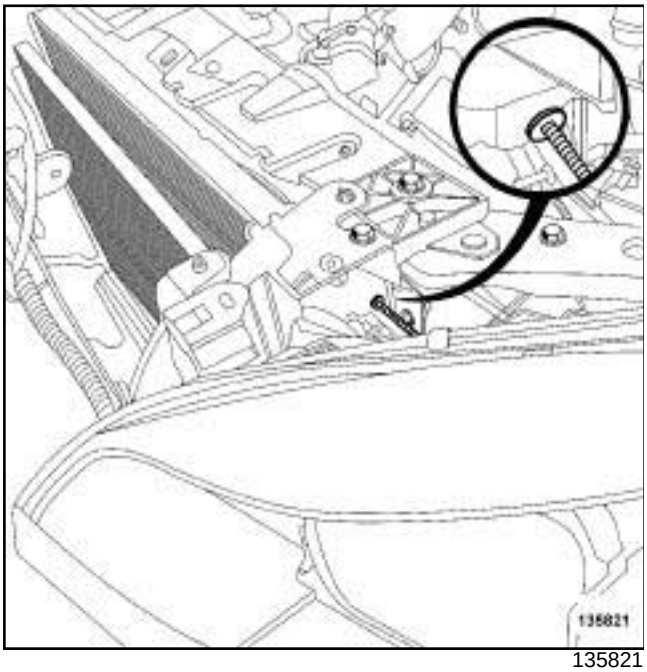

135821

❑ Unclip the bonnet release cable.

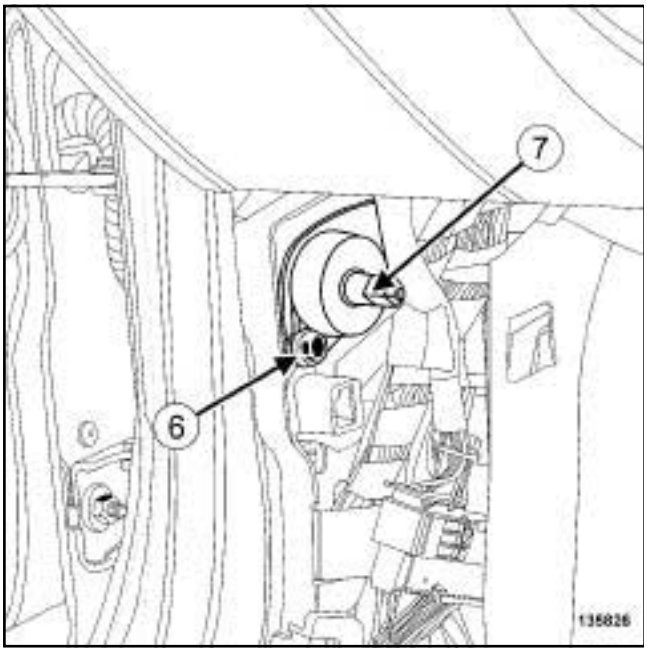

135826

❑ Remove the bolt (**6**) .

❑ Unclip the bonnet release control (**7**) .

❑ Remove the bonnet release cable.

J95

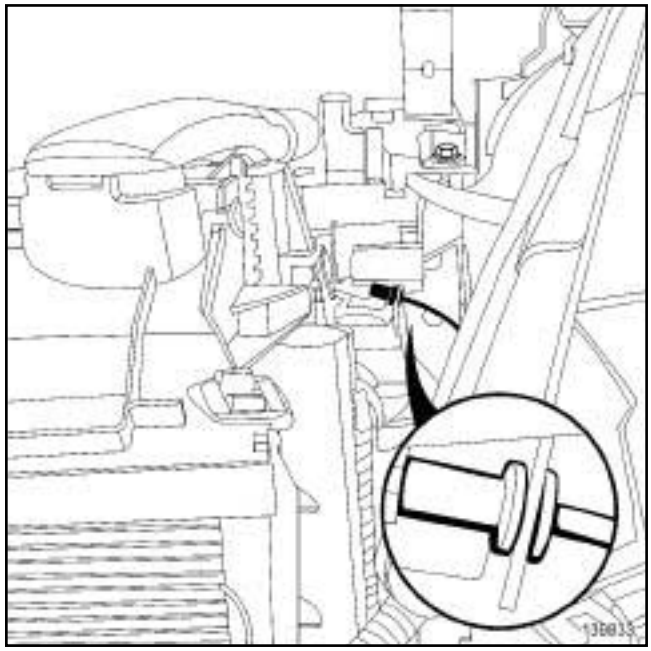

139833

❑ Unclip the bonnet release cable.

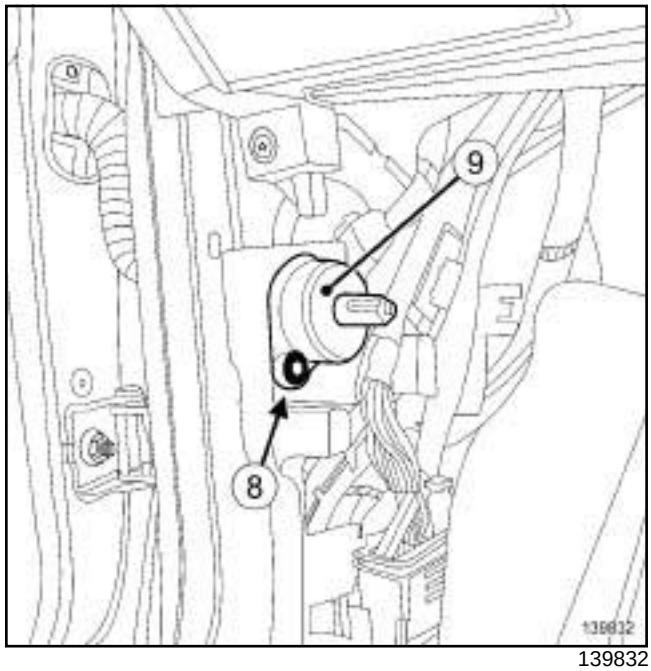

139832

❑ Remove the bolt (**8**) .

❑ Unclip the bonnet release control (**9**) .

❑ Note the route of the bonnet release cable.

❑ Remove the bonnet release cable.

REFITTING

I - REFITTING OPERATION FOR PART CONCERNED

❏ Refit the bonnet release cable through the inside of the vehicle.

❏ Clip on the bonnet release control.

❏ Refit the front bonnet release control bolt.

❏ Clip on the bonnet release cable.

II - FINAL OPERATION

❏ Refit:

- the pedal soundproofing ***(4)*** ,
- the clips ***(3)*** .

B95 or D95

❏ Position the headlight.

❏ Refit the headlight bolts ***(1)*** .

B95 or J95

❏ Refit:

- the front door sill lining (see **Front door sill lining: Removal - Refitting**) (71A, Body internal trim),
- the B-pillar lower trim (see **B-pillar lower trim: Removal - Refitting**) (71A, Body internal trim).

D95

❏ Refit the door sill lining (see **Door sill lining: Removal - Refitting**) (71A, Body internal trim).

❏ Refit:

- the bonnet catch (see **52A**, **Non-side opening element mechanisms**, **Bonnet latch: Removal - Refitting**, page **52A-1**) ,
- the air filter unit (see **Air filter unit: Removal - Refitting**) (12A, Fuel mixture),
- the battery tray (see **Battery tray: Removal - Refitting**) (80A, Battery),
- the battery (see **Battery: Removal - Refitting**) (80A, Battery),
- the front bumper (see **55A**, **Exterior protection**, **Front bumper: Removal - Refitting**, page **55A-1**) ,
- the front section of the front wheel arch liners (see **55A**, **Exterior protection**, **Front wheel arch liner: Removal - Refitting**, page **55A-24**) ,
- the front wheels (see **Wheel: Removal - Refitting**) (35A, Wheels and tyres).

Tightening torques ▽	
tailgate lock bolts	**8 N.m**

REMOVAL

I - REMOVAL PREPARATION OPERATION

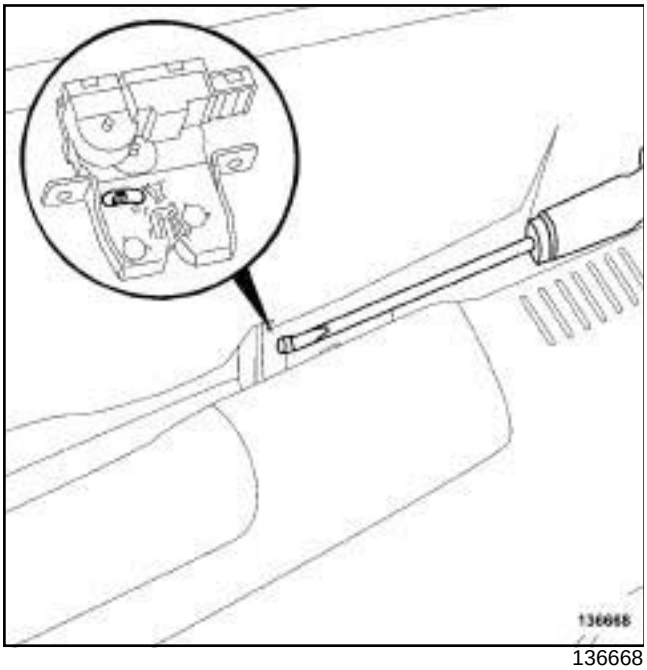

136668

❑

> Note:
>
> If there is an electrical fault, the tailgate can be opened manually using a flat-blade screwdriver.
>
> This operation is performed from inside the vehicle.

❑ Remove the tailgate trim (see **Tailgate lining: Removal - Refitting**) (73A, Non-side opening elements trim).

II - OPERATION FOR REMOVAL OF PART CONCERNED

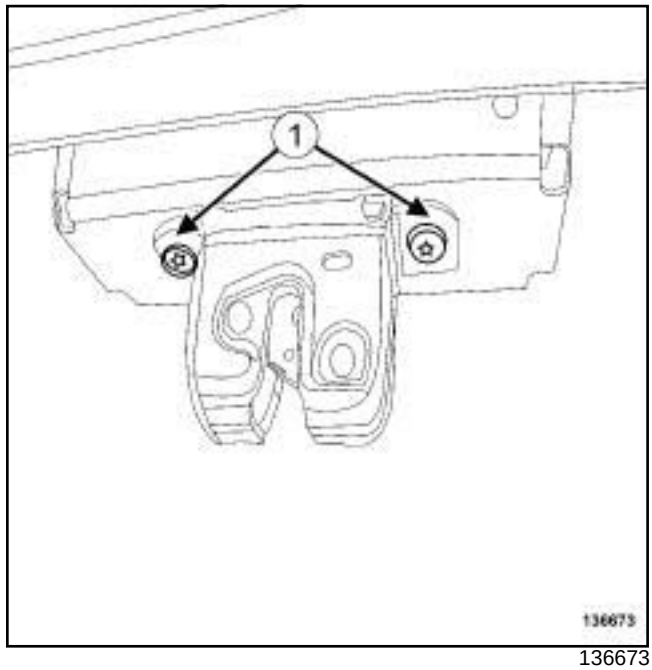

136673

❑ Remove the tailgate lock bolts (**1**) .

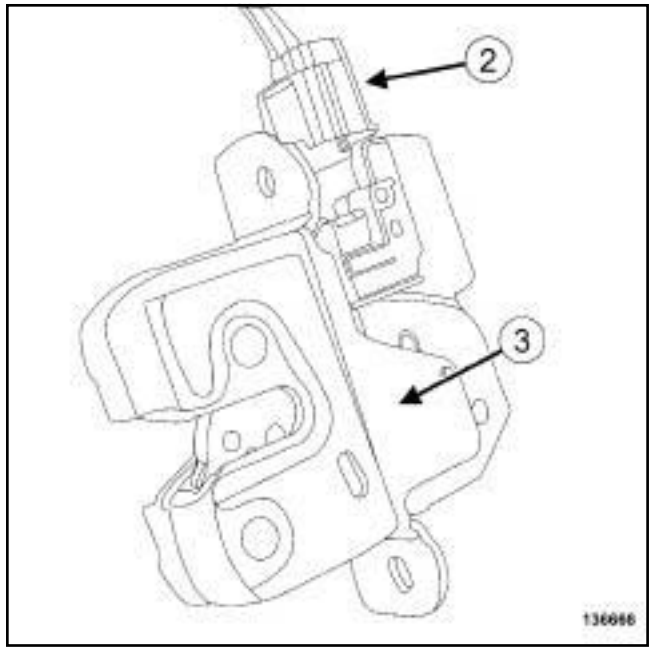

136666

❑ Disconnect the connector (**2**) .

❑ Remove the tailgate lock (**3**) .

REFITTING

I - REFITTING OPERATION FOR PART CONCERNED

❏ Connect the tailgate lock connector.

❏ Refit:

- the tailgate lock,
- the tailgate lock bolts.

❏ Torque tighten the **tailgate lock bolts (8 N.m)**.

❏ Carry out a function test.

II - FINAL OPERATION

❏ Refit the tailgate trim (see **Tailgate lining: Removal - Refitting**) (73A, Non-side opening elements trim).

REMOVAL

I - REMOVAL PREPARATION OPERATION

❑

> **WARNING**
> The strut is fitted in such a way as to prevent leaks. Note the strut's direction of fitting (position of the body and cylinder rod) before removing it, in order to refit the strut identically during the refitting operation.

II - OPERATION FOR REMOVAL OF PART CONCERNED

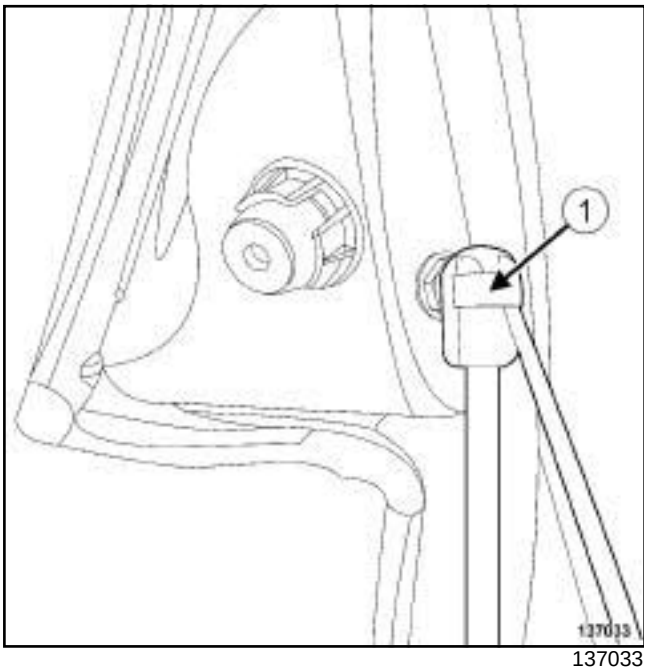

137033

❑ Unclip the clips (**1**) without removing them.

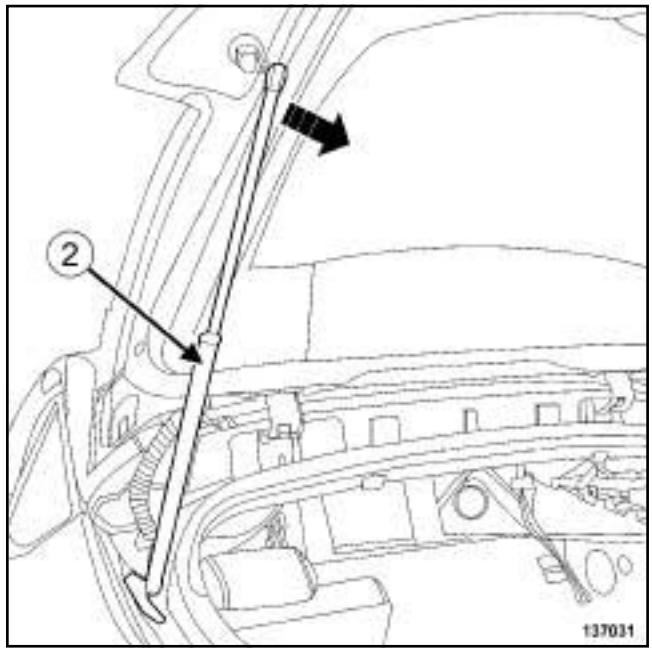

137031

❑ Remove the tailgate strut (**2**) while holding the tailgate.

REFITTING

I - REFITTING PREPARATION OPERATION

❑ Position the clips on the tailgate strut

II - REFITTING OPERATION FOR PART CONCERNED

❑ Refit the tailgate strut.

PANORAMIC SUNROOF

Essential special tooling	
Car. 1033	Windscreen mastic cutting wire inserting tool.

IMPORTANT

To avoid all risk of damage to the systems, apply the safety and cleanliness instructions and operation recommendations before carrying out any repair:

- (see **Airbag and Pretensioners: Precautions for repair**) (88C, Airbags and pretensioners),
- (see **Vehicle: Precautions for repair**) (01D, Mechanical introduction).

REMOVAL

I - REMOVAL PREPARATION OPERATION

❑ Open the sunroof mobile panel halfway.

❑ Disconnect the battery (see **Battery: Removal - Refitting**) (80A, Battery).

❑ Remove the headlining (see **Headlining: Removal - Refitting**) (71A, Body internal trim).

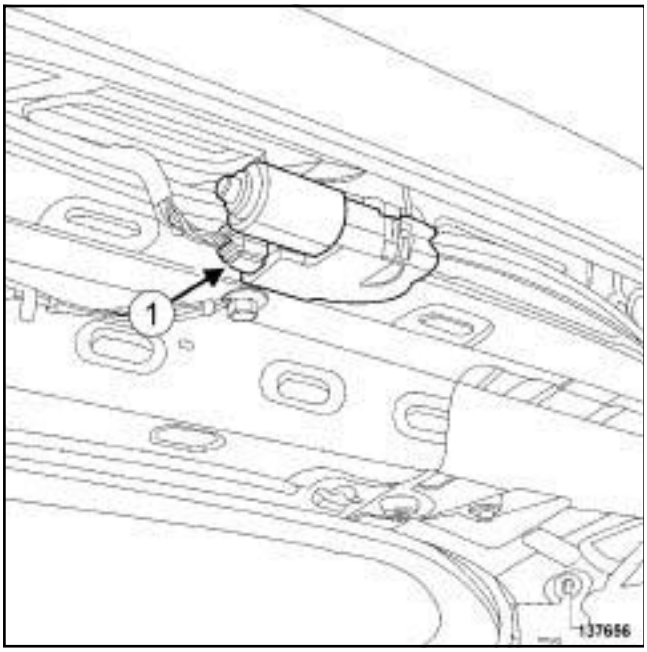

137656

❑ Disconnect the sunroof motor supply connector (**1**) .

❑ Unclip the sunroof motor wiring from the clips.

❑ Protect:

- the vehicle interior,
- the edge of the sunroof operating mechanism using masking tape.

II - OPERATION FOR REMOVAL OF PART CONCERNED

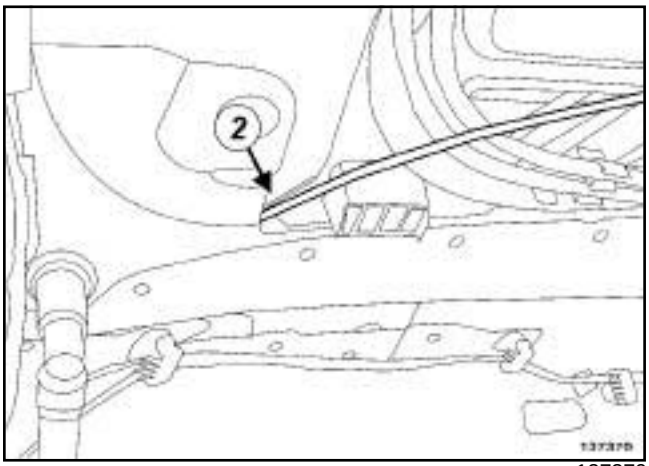

137370

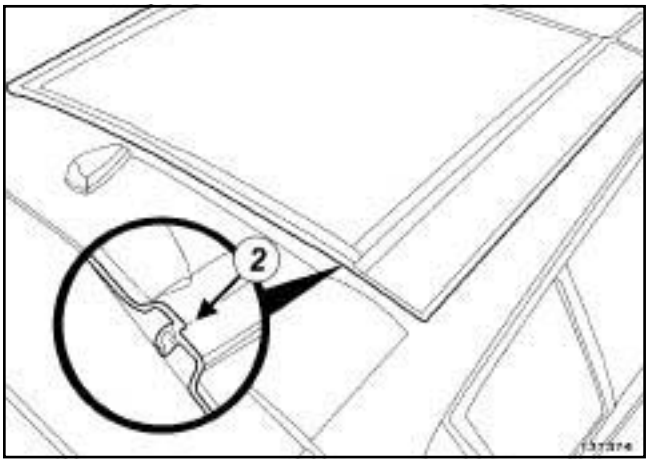

137374

❑ Insert:

- the tool **(Car. 1033)** at (**2**) in the rear right- or left-hand section of the sunroof operating mechanism,
- the cutting wire in the tool **(Car. 1033)**, or in a **2.5 mm** diameter tube, outside the vehicle.

PANORAMIC SUNROOF

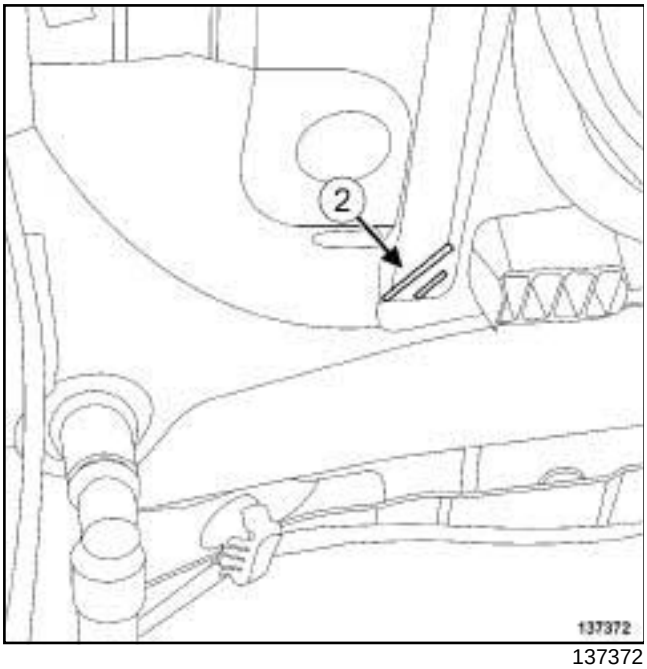

137372

- Collect the cutting wire in the reserve (**2**) , and leave it inside the vehicle until needed.
- Route the cutting wire between the sunroof operating mechanism and the roof using the tool **(Car. 1033)**.

B95

- Lift the sunroof operating mechanism side seal using the tool **(Car. 1033)**.

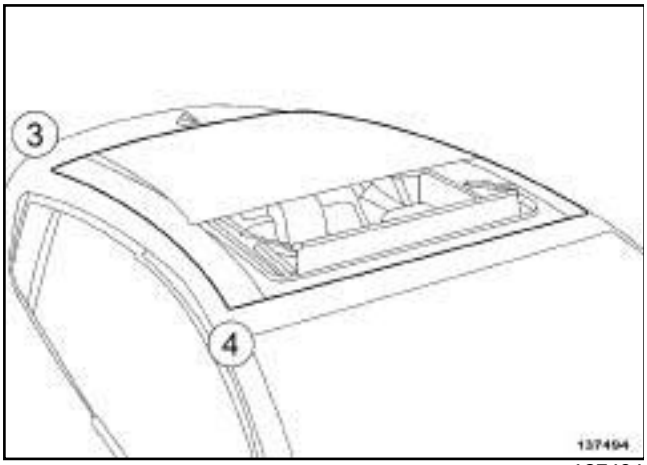

137494

- Slide the cutting wire from (**3**) to (**4**) under the sunroof operating mechanism side seal (if necessary, wet the seal with wiper fluid to facilitate this operation).

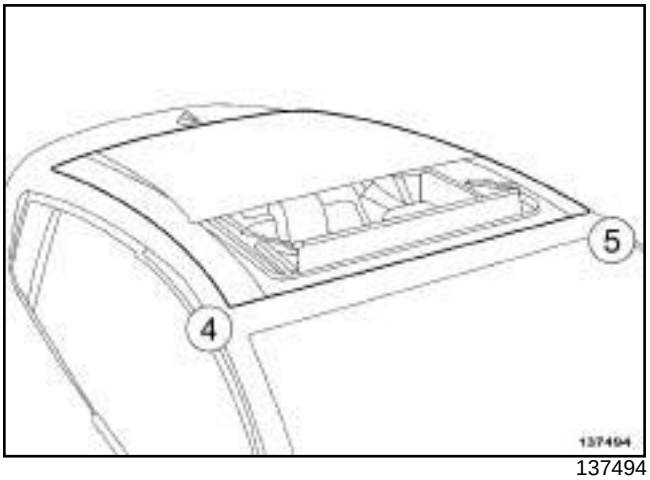

137494

- Follow the same procedure to slide the wire under the front aerodynamic seal from (**4**) to (**5**) .

PANORAMIC SUNROOF

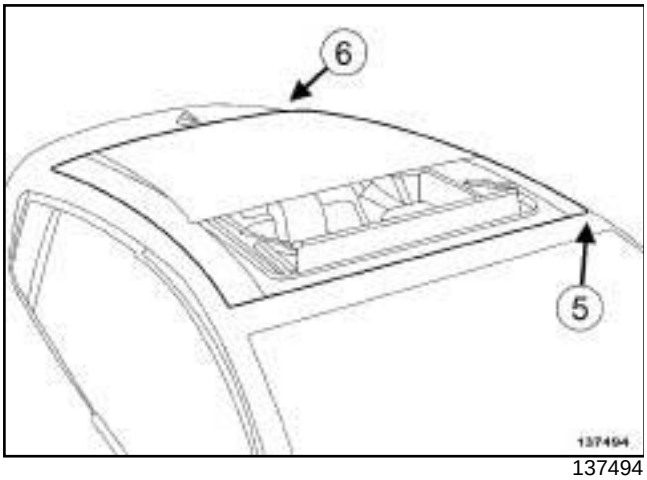

137494

- ❑ Repeat the operation under the sunroof operating mechanism side seal from (**5**) to (**6**) .
- ❑ Cut the cutting wire (leave a sufficient length of wire to use) and remove the tool **(Car. 1033)**.

> Note:
>
> When routing the cutting wire into the vehicle interior, be careful not to cross the two wires, as this would make cutting the seal impossible.

- ❑ Route the cutting wire inside the vehicle through the reserve ***(2)*** using the tool **(Car. 1033)**.
- ❑ Fit the cutting handles on the two sections of the cutting wire inside the vehicle.
- ❑ Cut the cement bead from ***(3)*** to ***(4)*** and leave the other handle in place until needed.

> Note:
>
> Reduce the length of the cutting wire as you cut.

- ❑ Pass the cutting wire to the roof centre cross member.
- ❑ Extend the cement bead cut at ***(4)*** to ***(5)*** .
- ❑ Leave the cutting handle in place at the opposite cross member.
- ❑ Cut the cement bead with the other handle from ***(3)*** to (**6**) and from (**6**) to (**5**) up to the roof centre cross member.
- ❑ Cut the cement bead on the roof centre cross member, by pulling on the two handles.
- ❑ Remove the sunroof operating mechanism (this operation requires two people) using the specific supports:
  - Support: **PARV 202**,
  - set of arch supports: **APARV 200 ESP**.

REFITTING

I - REFITTING PREPARATION OPERATION

- ❑ For preparation and bonding (see **Technical Note 560A**).
- ❑ **parts always to be replaced: Roof opening element adjusting shim (50,04,22,03)**.
- ❑ Check the air seal and replace it if necessary.

II - REFITTING OPERATION FOR PART CONCERNED

- ❑ Position:
  - the indexing guides,
  - the new positioning shims on the sunroof operating mechanism.
- ❑ Place the sunroof mobile panel in the closed position.
- ❑ Bond the sunroof operating mechanism (this operation requires two people plus a third inside the vehicle).
- ❑ Check that the positioning shims touch the roof.

III - FINAL OPERATION

- ❑ Fit the sunroof motor wiring on the clips.
- ❑ Connect the sunroof motor supply connector.
- ❑ Remove the indexing guides **30 minutes** after bonding.
- ❑ Refit the headlining (see **Headlining: Removal - Refitting**) (71A, Body internal trim).
- ❑ Connect the battery (see **Battery: Removal - Refitting**) (80A, Battery).
- ❑ Carry out a function test.
- ❑ Apply sunroof initialisation procedure using the diagnostic tool:
  - connect the diagnostic tool,
  - select "Roof opening element computer",
  - go to repair mode,
  - display the "Before/After repair procedure",
  - select "Roof opening element computer" in the "List of components controlled by this computer" section,

PANORAMIC SUNROOF

- carry out the operations described in the "After repair procedure" section.

PANORAMIC SUNROOF

Tightening torques ▽	
rear bolts on the sunroof mobile panel	**6 N.m**
front bolts on the sunroof mobile panel	**6 N.m**

REMOVAL

I - REMOVAL PREPARATION OPERATION

❑ Open the sunroof mobile panel.

II - OPERATION FOR REMOVAL OF PART CONCERNED

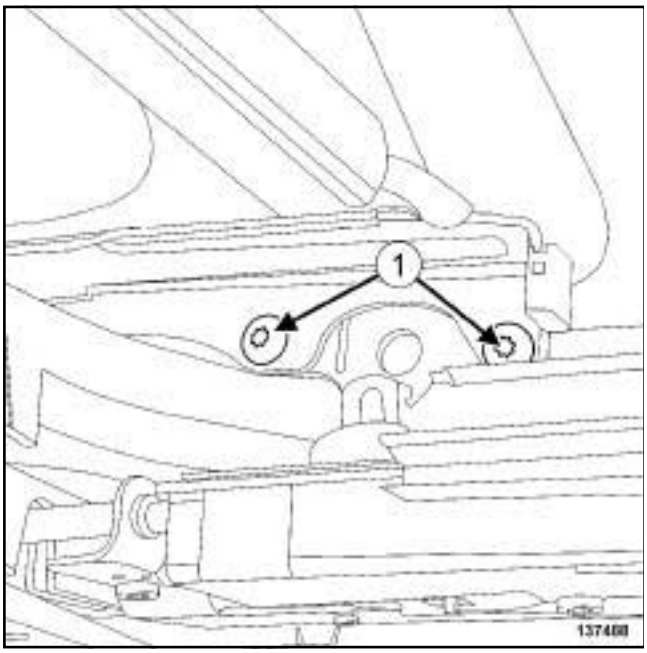

137488

❑ Remove the front bolts (**1**) from the sunroof mobile panel.

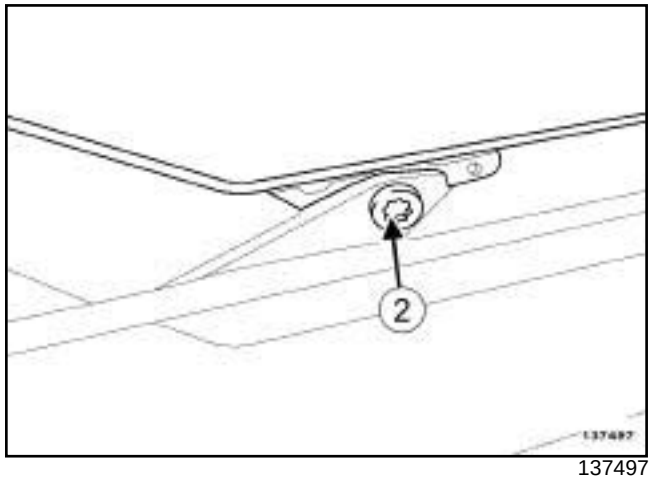

137497

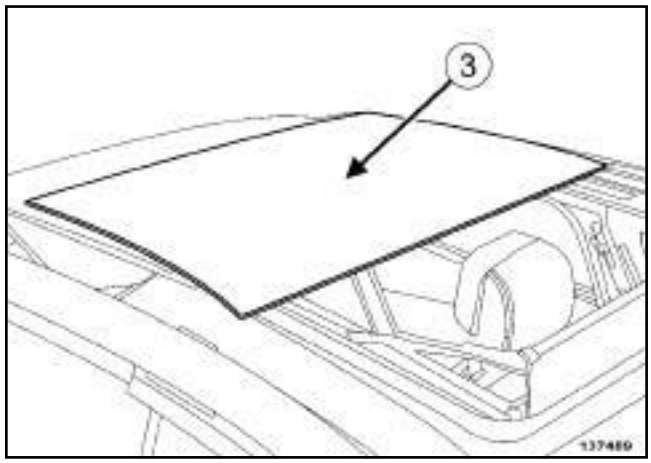

137489

❑ Remove:

- the rear bolts (**2**) from the sunroof mobile panel,
- the sunroof mobile panel (**3**) (this operation requires two people).

REFITTING

I - REFITTING PREPARATION OPERATION

❑

> Note:
>
> When « removing and refitting» the sunroof mobile panel, apply **HIGH STRENGTH THREAD LOCK** to the mobile panel bolts (see **Vehicle: Parts and ingredients for the repairwork**) (04B, Consumables - Products).
>
> When replacing the sunroof mobile panel, replace the bolts with those supplied with the sunroof mobile panel.

PANORAMIC SUNROOF

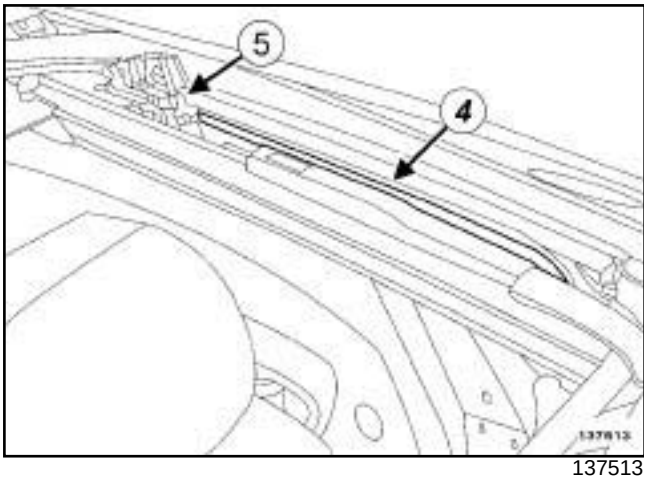

137513

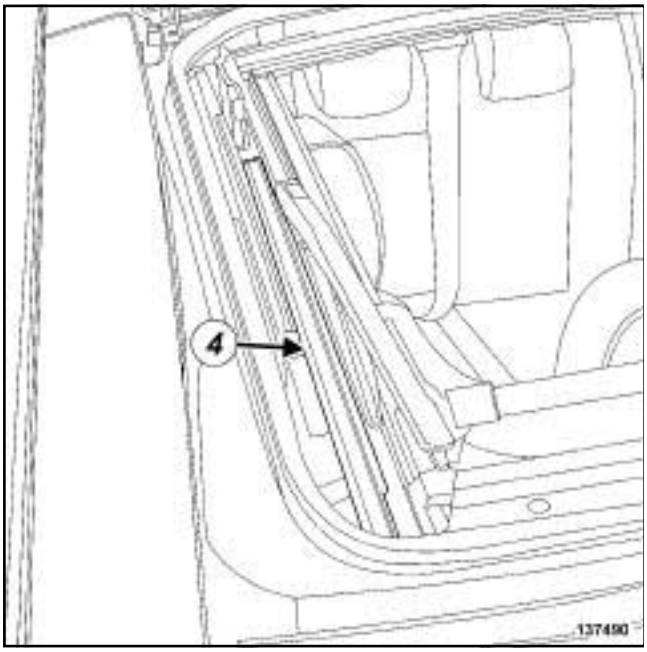

137490

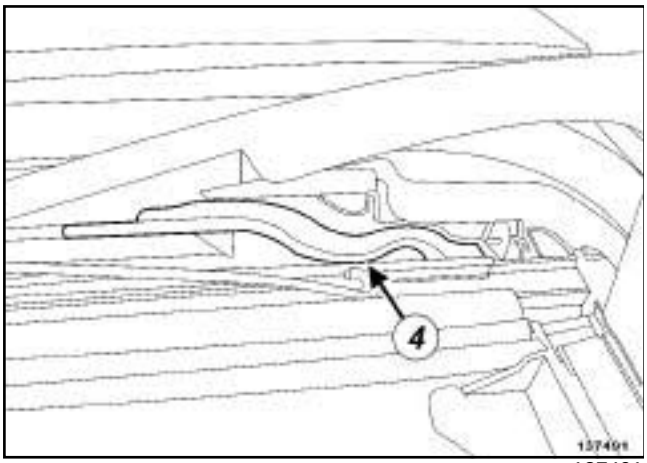

137491

❑ Using a **LINT-FREE CLOTH** soaked in **HEPTANE** (see **Vehicle: Parts and ingredients for the repairwork**) (04B, Consumables - Products), clean:

- the guide runner (**4**) ,
- the drive mechanism (**5**) .

❑ Wipe the areas with a clean and dry **LINT-FREE CLOTH** (see **Vehicle: Parts and ingredients for the repairwork**) (04B, Consumables - Products).

❑ Using a fine brush, lightly grease the following areas only with **OPENING ELEMENT GREASE** (see **Vehicle: Parts and ingredients for the repairwork**) (04B, Consumables - Products).

II - REFITTING OPERATION FOR PART CONCERNED

❑ Refit:

- the sunroof mobile panel (this operation requires two people),
- the rear bolts ***(2)*** from the sunroof mobile panel,
- the front bolts ***(1)*** from the sunroof mobile panel.

❑ Adjust the sunroof mobile panel, the front section of the sunroof mobile panel must be lower than **2 mm** in relation to the roof line.

❑ Torque tighten:

- the **rear bolts on the sunroof mobile panel (6 N.m)**,
- the **front bolts on the sunroof mobile panel (6 N.m)**.

PANORAMIC SUNROOF

III - FINAL OPERATION

❑ Initialisation and programming procedure using digital commands (if the diagnostic tool is absent):

- read the procedure in full before starting,
- set the button to the "sunroof closed" position (= button turned anti-clockwise and fully to the left),
- press and hold the centre part of the button: the roof travels to the closing end stop, confirmed by a clicking sound,
- after hearing the clicking sound, keep the button held for approximately 1 second,
- release the button,
- immediately press and hold the button again until the roof opens approximately 2/3 of the way and then closes completely. (It is normal for the sunroof not to open immediately (delay of approximately 5 seconds),
- release the button: the sunroof is operational again.

Note:

If the procedure fails (excessive delay between button presses or procedure interrupted), restart from the beginning of the procedure.

PANORAMIC SUNROOF

Tightening torques ▽	
sunroof deflector bolts	**2 N.m**

REMOVAL

I - REMOVAL PREPARATION OPERATION

❑ Open the sunroof mobile panel.

II - OPERATION FOR REMOVAL OF PART CONCERNED

B95

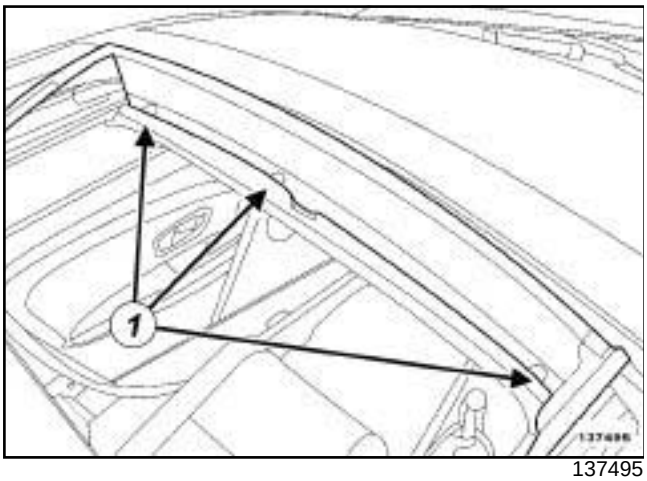

137495

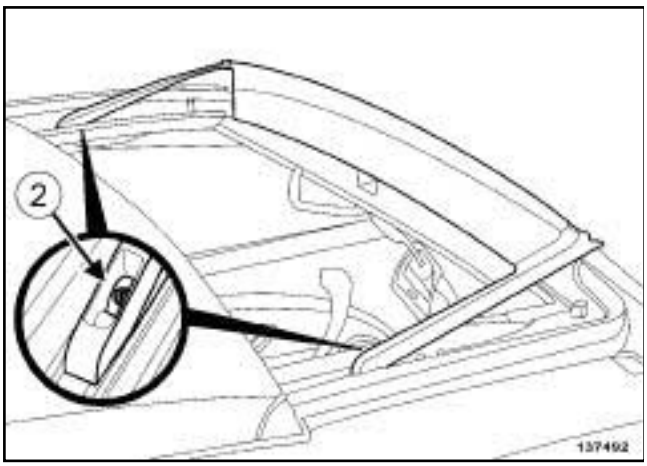

137492

❑ Remove:

- the bolts (**1**) and (**2**) while holding the sunroof deflector,
- the sunroof deflector.

J95

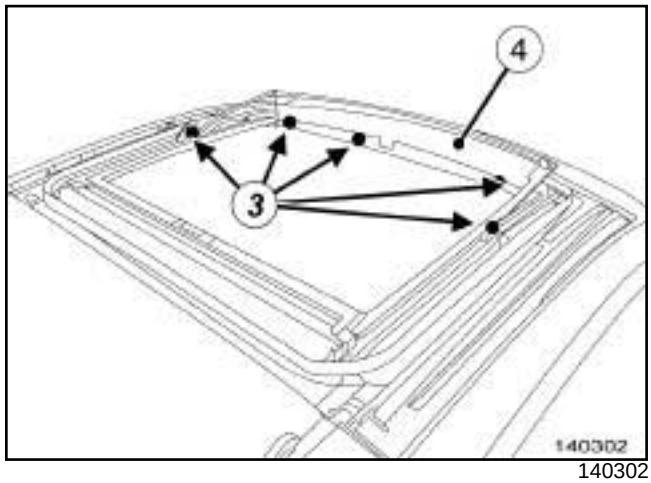

140302

❑ Remove:

- the bolts (**3**) while holding the sunroof deflector,
- the sunroof deflector (**4**) .

REFITTING

I - REFITTING PREPARATION OPERATION

❑

> Note:
>
> When « removing - refitting » the sunroof deflector, apply some **HIGH RESISTANCE THREADLOCK** (see **Vehicle: Parts and ingredients for the repairwork**) (04B, Consumables - Products) to the sunroof deflector bolts.
>
> When replacing the sunroof deflector, replace the bolts with those supplied with the sunroof deflector.

PANORAMIC SUNROOF

II - REFITTING OPERATION FOR PART CONCERNED

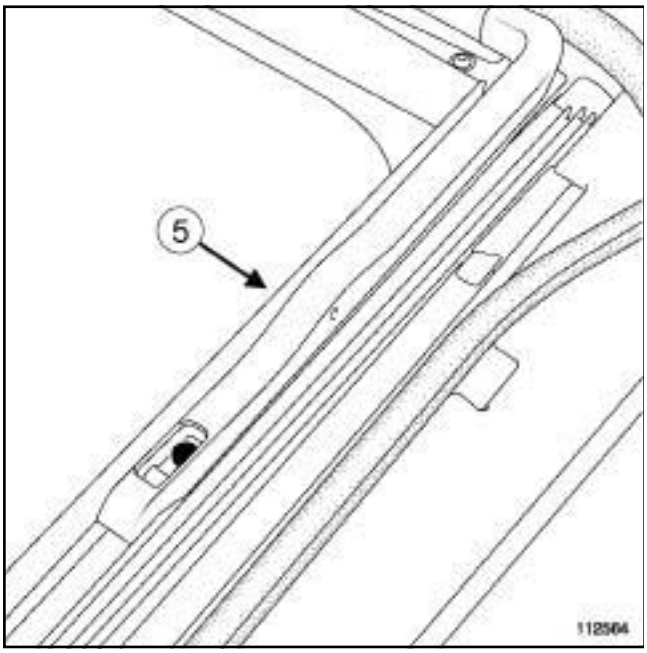

112564

- ❑ Refit the sunroof deflector (this operation requires two people).
- ❑ Put the sunroof deflector return spring in the proper position.
- ❑ Hold the sunroof deflector in position at (**5**) .
- ❑ Refit the bolts ***(1)*** , ***(2)*** and ***(3)*** .
- ❑ Torque tighten the **sunroof deflector bolts (2 N.m)**.

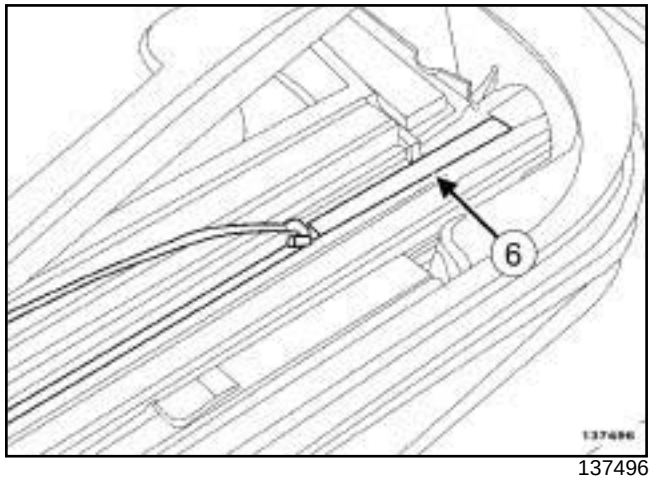

137496

- ❑ Clean the deflector return spring area (**6**) with a **LINT-FREE CLOTH** soaked in **HEPTANE** (see **Vehicle: Parts and ingredients for the repairwork**) (04B, Consumables - Products).
- ❑ Wipe the deflector return spring area (**6**) with a clean and dry **LINT-FREE CLOTH**.
- ❑ Using a fine brush, grease the area (**6**) with **OPENING ELEMENT GREASE** (see **Vehicle: Parts and ingredients for the repairwork**) (04B, Consumables - Products).

PANORAMIC SUNROOF

III - FINAL OPERATION

❑ Initialisation and programming procedure using digital commands (if the diagnostic tool is absent):

- read the procedure in full before starting.
- set the button to the "sunroof closed" position (= button turned anti-clockwise and fully to the left),
- press and hold the centre part of the button: the roof travels to the closing end stop, confirmed by a clicking sound,
- after hearing the clicking sound, keep the button held for approximately 1 second,
- release the button,
- immediately press and hold the button again until the roof opens approximately 2/3 of the way and then closes completely. It is normal for the sunroof not to open immediately (delay of approximately 5 seconds),
- release the button (the sunroof is operational again).

Note:

If the procedure fails (excessive delay between button presses or procedure interrupted), restart from the beginning of the procedure.

PANORAMIC SUNROOF

IMPORTANT

To avoid all risk of damage to the systems, apply the safety and cleanliness instructions and operation recommendations before carrying out any repair:

- (see **Airbag and Pretensioners: Precautions for repair**) (88C, Airbag and pretensioners),
- (see **Precautions for repair**) (01D, Mechanical introduction).

REMOVAL

I - REMOVAL PREPARATION OPERATION

❏ Disconnect the battery (see **Battery: Removal - Refitting**) (80A, Battery).

❏ Remove the headlining (see **Headlining: Removal - Refitting**) (71A, Body internal trim).

II - OPERATION FOR REMOVAL OF PART CONCERNED

B95

1 - Front sunroof sun visor

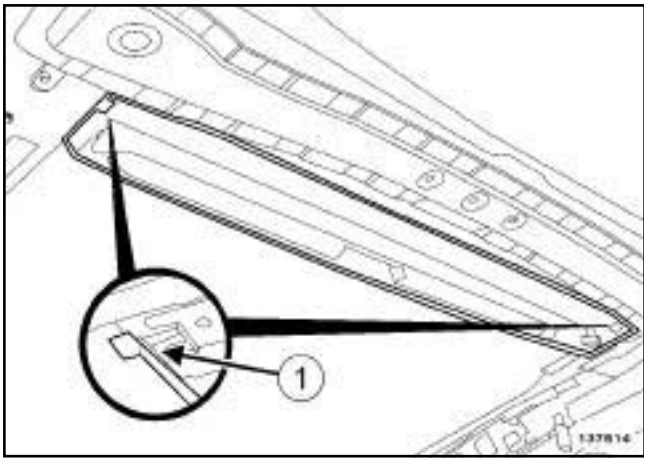

137514

❏ Unclip the clips (**1**) .

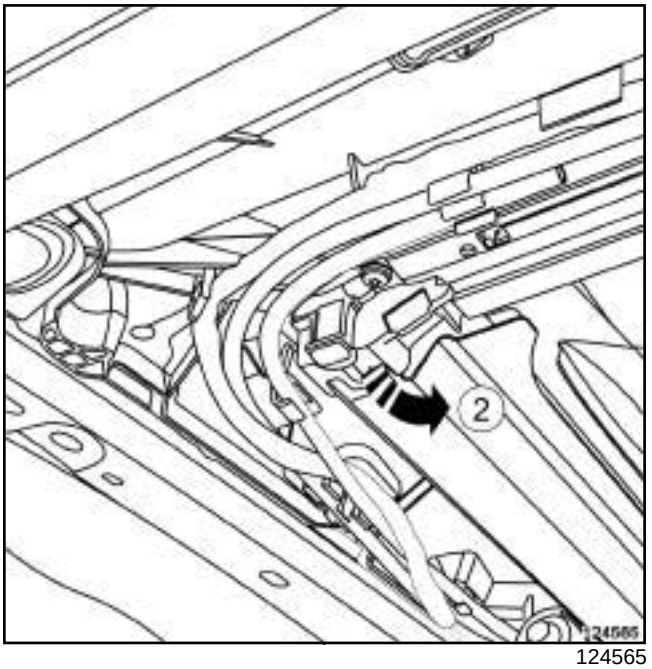

124565

❏ Remove the front sunroof sun visor at (**2**) .

2 - Rear sunroof sun visor

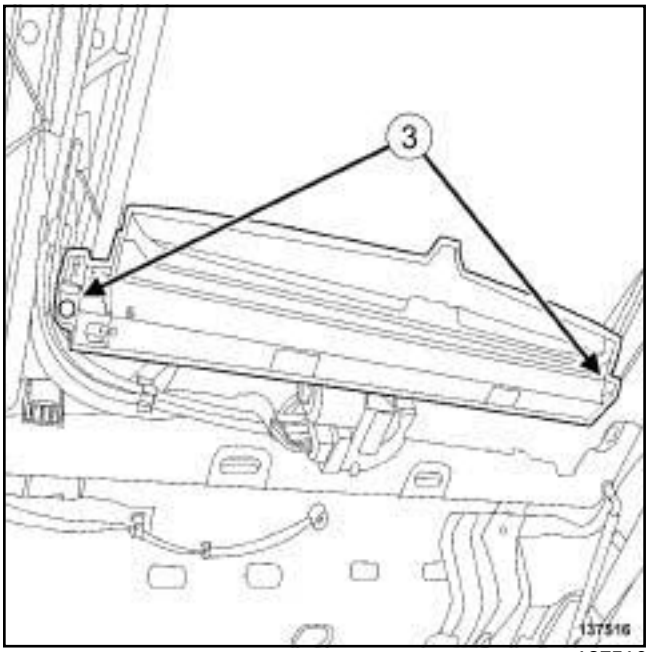

137516

❏ Remove:

- the bolts (**3**) ,
- the rear sunroof sun visor.

PANORAMIC SUNROOF

J95

3 - Front sunroof sun visor

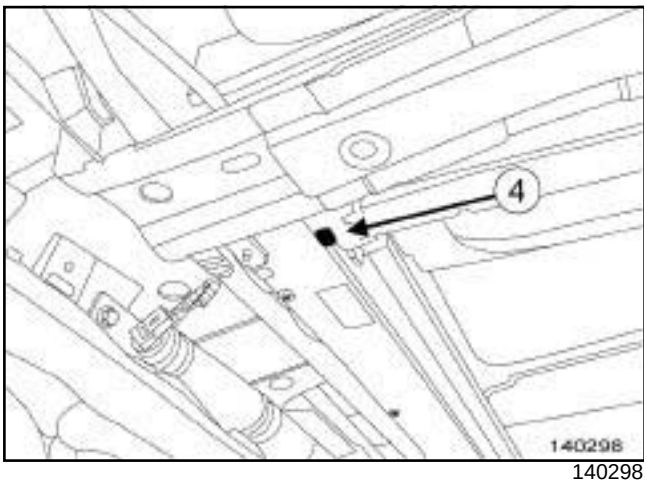

140298

❑ Unclip the clips (**4**) .

❑ Remove the front sunroof sun visor.

4 - Rear sunroof sun visor

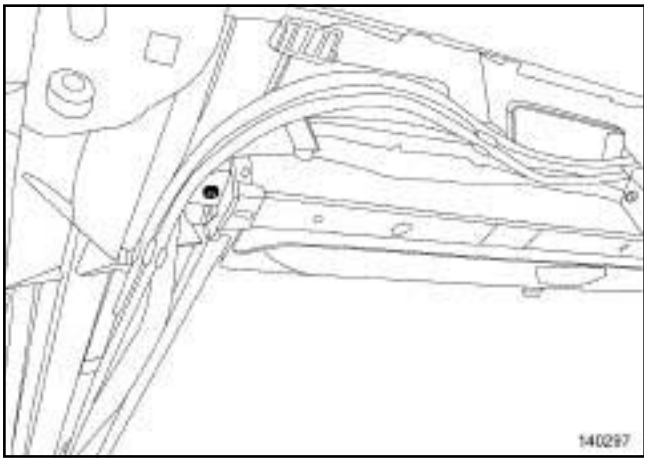

140297

❑ Remove:

- the bolts,
- the rear sunroof sun visor.

REFITTING

I - REFITTING OPERATION FOR PART CONCERNED

1 - Front sunroof sun visor

❑ Refit the front sunroof sun visor.

❑ Attach the clips.

2 - Rear sunroof sun visor

❑ Refit:

- the rear sunroof sun visor,
- the bolts.

II - FINAL OPERATION

❑ Carry out a function test.

❑ Refit the headlining (see **Headlining: Removal - Refitting**) (71A, Body internal trim).

❑ Connect the battery (see **Battery: Removal - Refitting**) (80A, Battery).

D95, and FIXED WINDOW SUNROOF

Essential special tooling	
Car. 1033	Windscreen mastic cutting wire inserting tool.

REMOVAL

REMOVAL PREPARATION OPERATION

❑ Disconnect the battery (see **Battery: Removal - Refitting**) (80A, Battery).

❑ Remove:

- the headlining (see **Headlining: Removal - Refitting**) (71A, Body internal trim),
- the sun visor from the fixed sunroof (see **52A**, **Non-side opening element mechanisms**, **Fixed glass sunroof visor: Removal - Refitting**, page **52A-23**) .

❑ Protect:

- the vehicle interior,
- the edge of the roof with masking tape.

OPERATION FOR REMOVAL OF PART CONCERNED

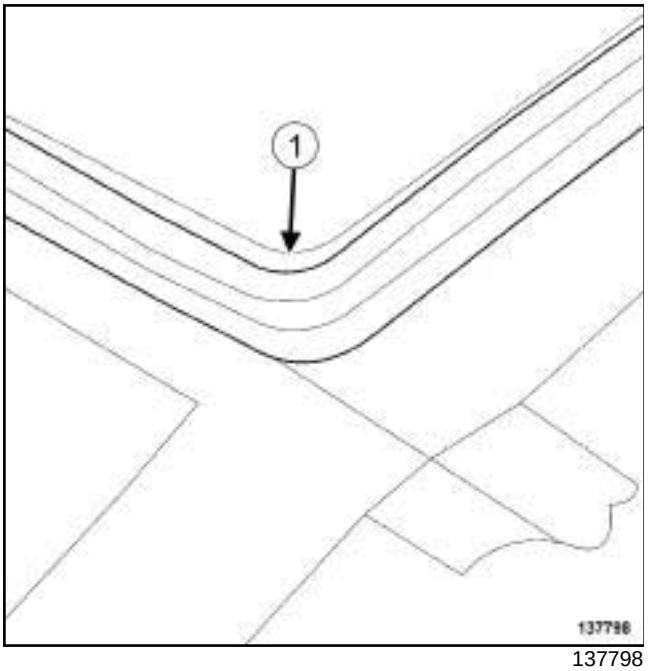

137798

❑ Lift the seal (**1**) in the rear left-hand or right-hand corner.

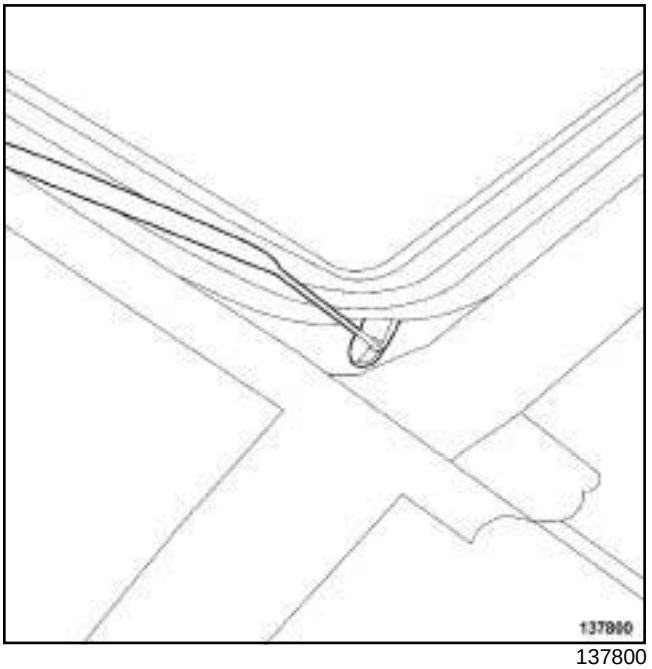

137800

❑ Pass the tool **(Car. 1033)** at the rear right- or left-hand section of the fixed sunroof..

❑ Insert the cutting wire in the wire insertion tool, or in a 2.5 mm diameter tube, outside the vehicle.

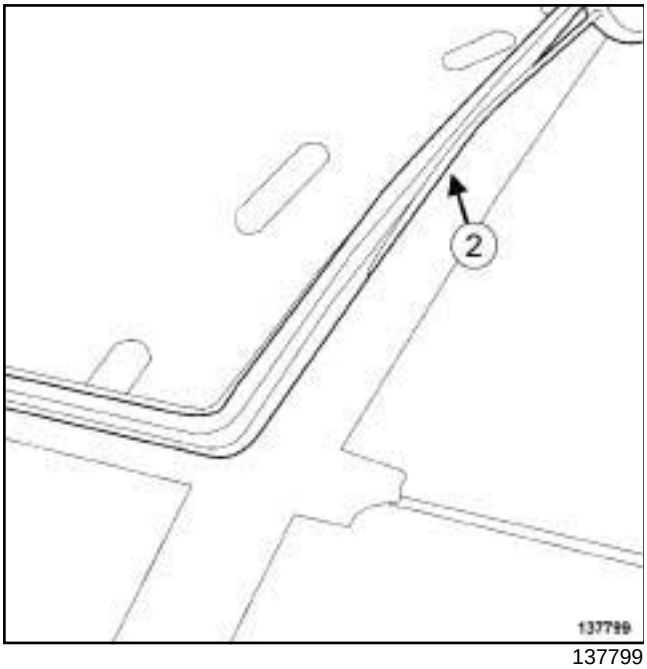

137799

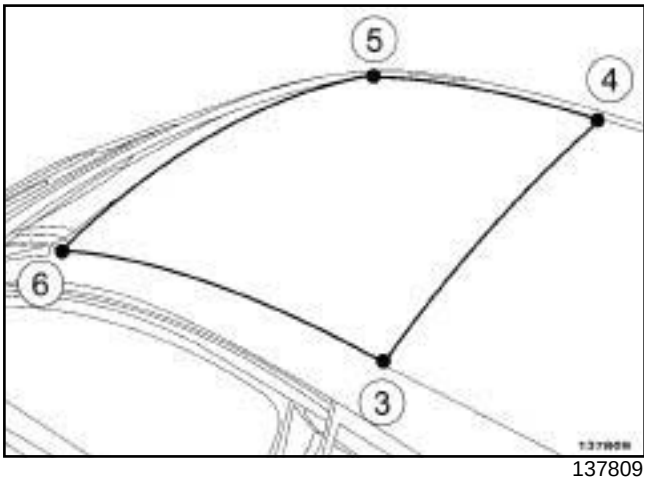

137809

- ❑ Slide the wire insertion tool under the seal (**2**) from (**4**) to (**5**) , from (**5**) to (**6**) , from (**6**) to (**3**) and from (**3**) to (**4**) .
- ❑ Prepare for a sufficient length of wire and remove the needle.
- ❑ Pass the cutting wire from the exterior towards the interior at ***(1)*** using the tool **(Car. 1033)**.

> Note:
>
> When passing the cutting wire into the vehicle interior, be careful not to cross the two wires, as this would make cutting the seal impossible.

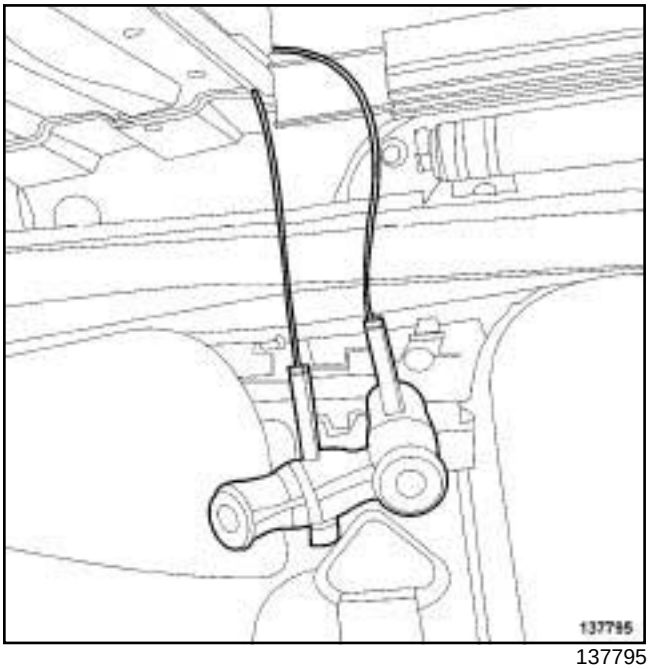

137795

- ❑ Fit the cutting handles on the two sections of the cutting wire inside the vehicle.
- ❑ Cut the cement bead from ***(4)*** to ***(5)*** , from ***(5)*** to ***(6)*** , from ***(6)*** to ***(3)*** and from ***(3)*** to ***(4)*** (leave the second handle inside the vehicle).

> Note:
>
> Reduce the length of the cutting wire as you cut.

- ❑ Remove the fixed sunroof using the specific support (this operation requires two people):

  - support: PARV 202,

  - set of arch supports: APARV 200 ESP.

REFITTING

I - REFITTING PREPARATION OPERATION

- ❑ For preparation and bonding (see **Technical Note 560A**).
- ❑ Check the condition of the seal around the edge of the fixed sunroof and replace it if necessary.

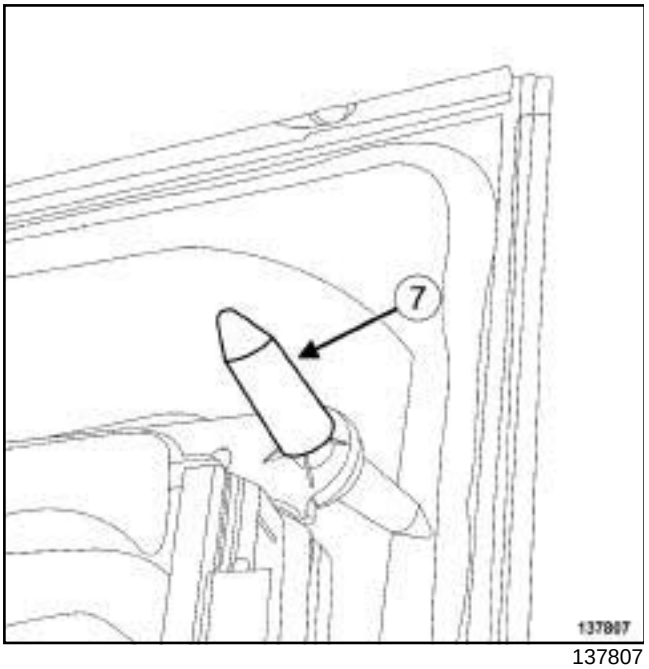

137807

❑ Position the indexing guides (**7**) .

II - REFITTING OPERATION FOR PART CONCERNED

❑ Bond the fixed sunroof (this operation requires two people).

❑ Make sure that the moulded sections are securely fitted in the corners.

❑ Remove the indexing guides **30 minutes** after bonding the fixed sunroof.

III - FINAL OPERATION

❑ Refit:

- the sun visor on the fixed sunroof (see **52A**, **Non-side opening element mechanisms**, **Fixed glass sunroof visor: Removal - Refitting**, page **52A-23**) ,
- the headlining (see **Headlining: Removal - Refitting**) (71A, Body internal trim).

❑ Connect the battery (see **Battery: Removal - Refitting**) (80A, Battery).

D95, and FIXED WINDOW SUNROOF

REMOVAL

I - REMOVAL PREPARATION OPERATION

- Disconnect the battery (see **Battery: Removal - Refitting**) (80A, Battery).
- Remove the headlining (see **Headlining: Removal - Refitting**) (71A, Body internal trim).

II - OPERATION FOR REMOVAL OF PART CONCERNED

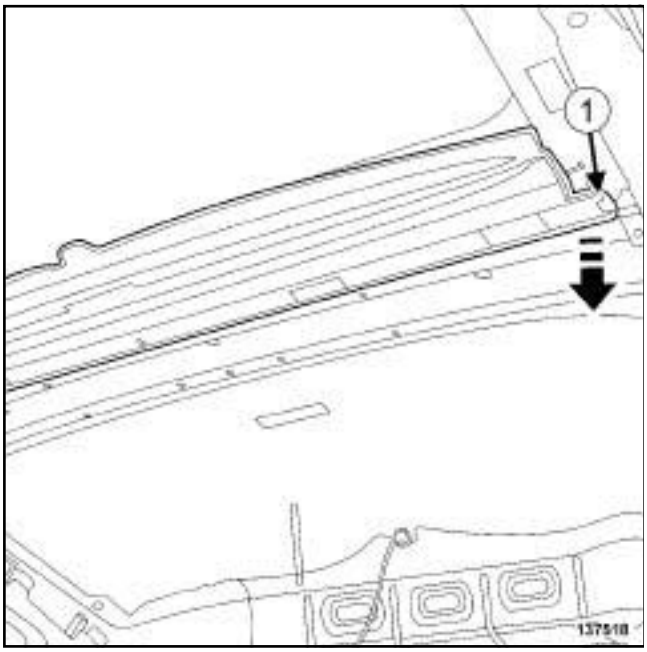

137518

- Unclip the clips (**1**) .
- Remove the sun visor from the fixed sunroof.

REFITTING

I - REFITTING OPERATION FOR PART CONCERNED

- Refit the sun visor on the fixed sunroof.
- Attach the clips.

II - FINAL OPERATION

- Carry out a function test.
- Refit the headlining (see **Headlining: Removal - Refitting**) (71A, Body internal trim).
- Connect the battery (see **Battery: Removal - Refitting**) (80A, Battery).

B95 or D95 or J95 or K95

Essential special tooling	
Car. 1847	Universal protector

REMOVAL

I - REMOVAL PREPARATION OPERATION

❑ Remove:

- the windscreen wiper arms (see **Windscreen wiper arm: Removal - Refitting**) (85A, Wiping - Washing),
- the scuttle panel grille (see **56A**, **Exterior equipment**, **Scuttle panel grille: Removal - Refitting**, page **56A-1**) ,
- the interior rear-view mirror (see **57A**, **Interior equipment**, **Interior rear-view mirror Removal - Refitting**, page **57A-43**) ,
- the windscreen pillar trims (see **A-pillar trim: Removal - Refitting**) (71A, Body internal trim).

AUTO LIGHTS+WIPER

❑ Remove the rain and light sensor (see **Rain and light sensor: Removal - Refitting**) (85D, Wiping - Washing).

J95

❑ Remove the windscreen pillar trims (see **55A**, **Exterior protection**, **A-pillar trim piece: Removal - Refitting**, page **55A-29**) .

❑ Fit the tool **(Car. 1847)** on the dashboard.

❑ Protect the area around the windscreen with masking tape.

II - OPERATION FOR REMOVAL OF PART CONCERNED

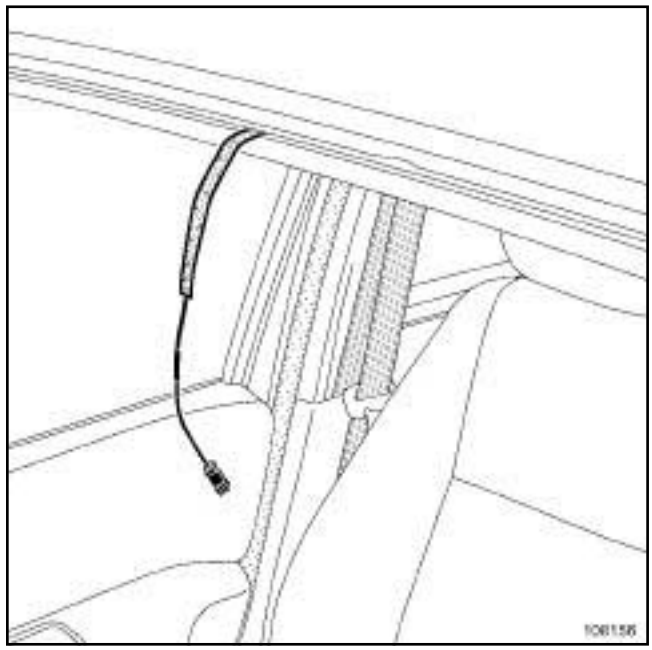

108156

❑

WARNING
When cutting the cement bead, take care not to cut the wiring harness.

NORMAL ROOF

❑ Cut the cement bead (see **Technical Note 560A**).

D95, and FIXED WINDOW SUNROOF

❑

Note:
For cutting the upper section of the windscreen, it is preferable to use the pneumatic window cutting tool, in order not to damage the finishing seal of the fixed glass roof.

❑ Cut the cement bead (see **Technical Note 560A**).

❑ Remove the windscreen (this operation requires two people).

B95 or D95 or J95 or K95

REFITTING

I - REFITTING PREPARATION OPERATION

❏ **parts always to be replaced: Windscreen adjusting shim (50,04,02,03)**.

AUTO LIGHTS+WIPER

❏ **parts always to be replaced: rain and light sensor base (80,04,02,12)**.

❏ Fit the new shims and retaining thrust bearings.

❏ For preparation and bonding (see **Technical Note 560A**).

II - REFITTING OPERATION FOR PART CONCERNED

❏ Bond the windscreen (this operation requires two people).

❏ Respect the following clearances and flush fitting:

- « windscreen - roof panel » ,
- « windscreen - windscreen pillar » .

❏ Hold the windscreen in position with masking tape.

III - FINAL OPERATION

J95

❏ Refit the windscreen pillar trims (see **55A**, **Exterior protection**, **A-pillar trim piece: Removal - Refitting**, page **55A-29**) .

AUTO LIGHTS+WIPER

❏ Refit:

- a new adhesive base for the rain and light sensor (see **Rain and light sensor: Removal - Refitting**) (85A, Wiping - Washing),
- the rain and light sensor (see **Rain and light sensor: Removal - Refitting**) (85D, Wipers - Washing).

❏ Refit:

- the windscreen pillar trims (see **A-pillar trim: Removal - Refitting**) (71A, Body internal trim),
- the interior rear-view mirror (see **57A**, **Interior equipment**, **Interior rear-view mirror Removal - Refitting**, page **57A-43**) ,
- the scuttle panel grille (see **56A**, **Exterior equipment**, **Scuttle panel grille: Removal - Refitting**, page **56A-1**) ,
- the windscreen wiper arms (see **Windscreen wiper arm: Removal - Refitting**) (85A, Wiping - Washing).

B95 or D95 or K95

REMOVAL

I - REMOVAL PREPARATION OPERATION

❑ Remove the front side door trim (see **Front side door trim: Removal - Refitting**) (72A, Side opening elements trim).

D95

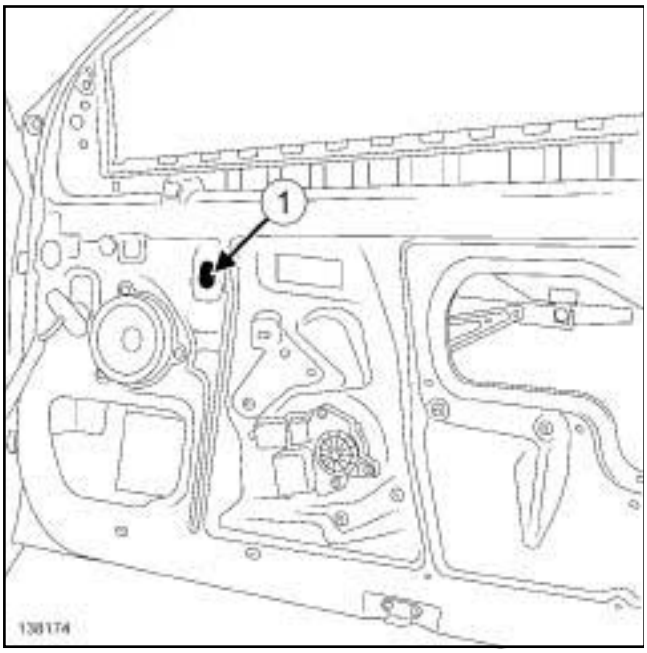

138174

❑ Remove the blanking cover (**1**) .

B95 or K95

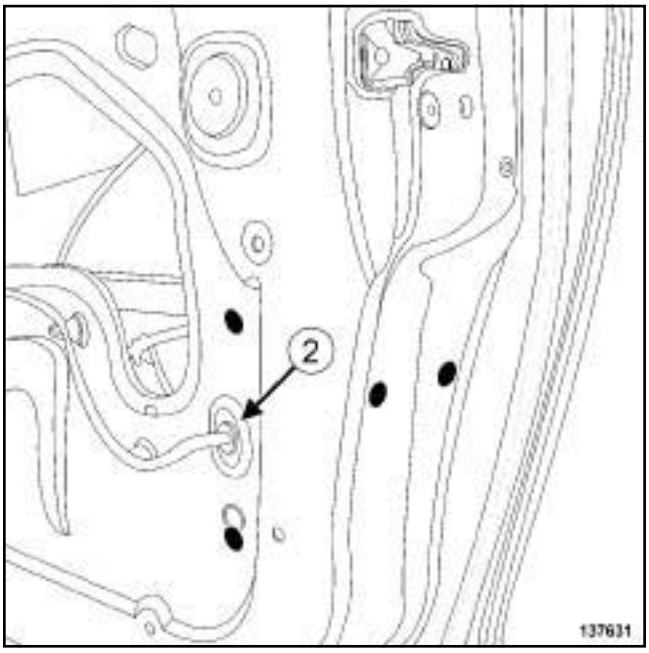

137631

❑ Partially remove the blanking cover (**2**) of the front side door electrical wiring.

❑ Remove the door sealing film (see **Door sealing film: Removal - Refitting**) (65A, Opening element sealing).

❑ Lower the window to access the bolts.

❑ Disconnect the battery (see **Battery: Removal - Refitting**) (80A, Battery).

> Note:
>
> In order to avoid accidental damage, protect the side impact sensor with cardboard and adhesive tape.

❑ Remove the interior weatherstrip.

B95 or D95 or K95

II - OPERATION FOR REMOVAL OF PART CONCERNED

D95

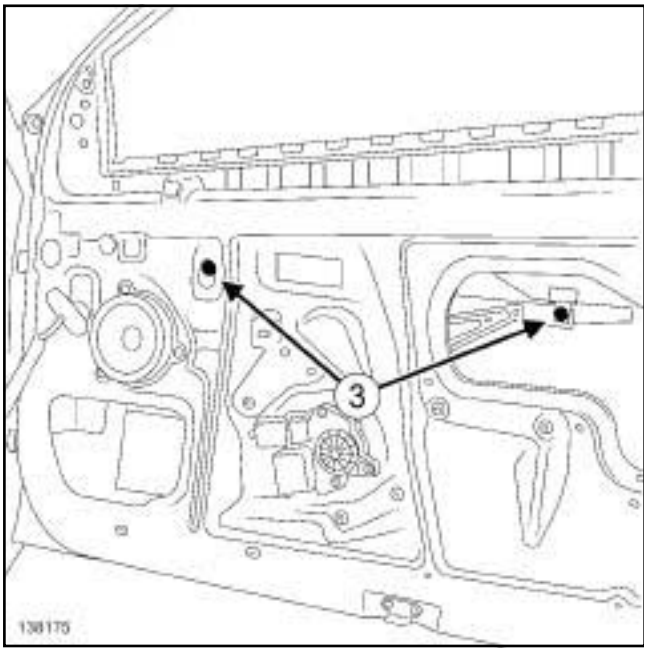

138175

- Remove:
  - the bolts (**3**) ,
  - the front side door sliding window.

REFITTING

I - REFITTING PREPARATION OPERATION

- **parts always to be replaced: front side opening element sliding window bolt (50,04,06,05)**.

II - REFITTING OPERATION FOR PART CONCERNED

- Refit the front side door sliding window glass.

III - FINAL OPERATION

- Connect the battery (see **Battery : Removal - Refitting**) (80A, Battery).
- Carry out a function test.
- Remove the side impact sensor protection.
- Refit the interior weatherstrip.

B95 or K95

- Refit the blanking cover of the front side door electrical wiring.

D95

- Refit the blanking cover to access the window mounting.

- Refit new door sealing film (see **Door sealing film: Removal - Refitting**) (65A, Opening element sealing).
- Carry out a sealing test (see **Technical Note 0653A**).
- Refit the front side door trim (see **Front side door trim: Removal - Refitting**) (72A, Side opening elements trim).

J95

REMOVAL

I - REMOVAL PREPARATION OPERATION

❑ Remove:

- the front side door trim (see **Front side door trim: Removal - Refitting**) (72A, Side opening element trim),
- the sealing film (see **Door sealing film: Removal - Refitting**) (65A, Opening element sealing),
- the front speaker (see **Front speakers: Removal - Refitting**) (86A, Radio),
- the front side door exterior weatherstrip (see **Front door side exterior weather strip: Removal - Refitting**) (66A, Opening elements sealing),
- the front side door interior weatherstrip.

❑ Lower the front side sliding door window.

❑ Disconnect the battery (see **Battery: Removal - Refitting**) (80A, Battery).

❑ Protect the side impact sensor to prevent any accidental damage (cardboard and adhesive tape).

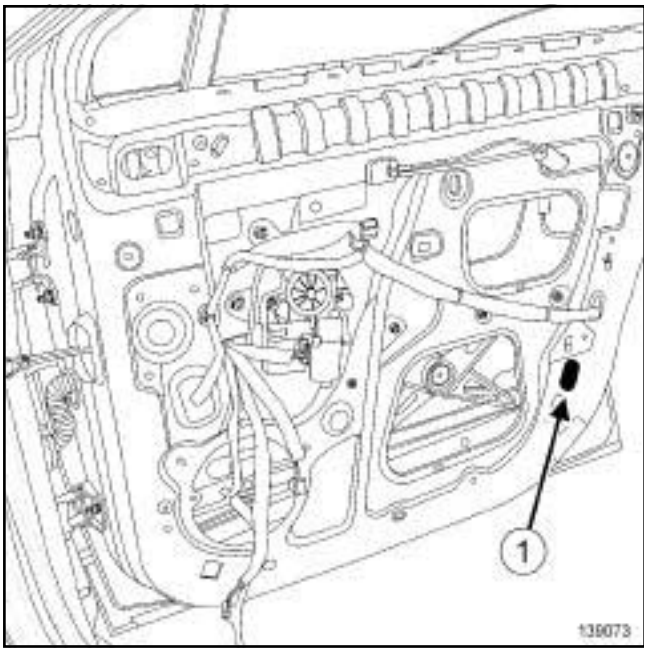

139073

❑ Remove the blanking cover (**1**) .

II - OPERATION FOR REMOVAL OF PART CONCERNED

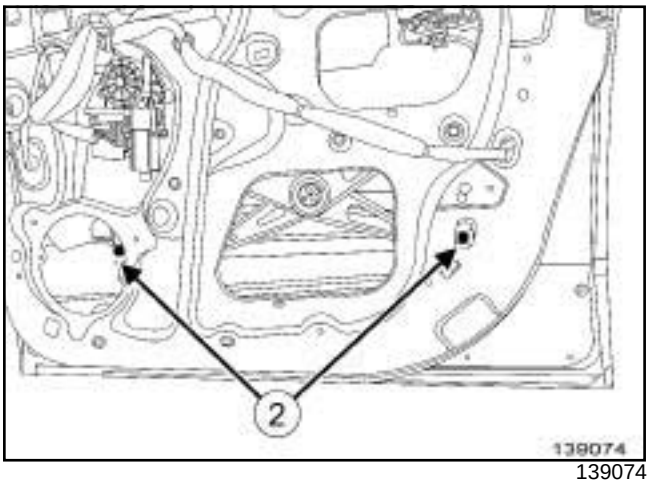

139074

❑ Remove the bolts (**2**) .

❑ Wind the front side door sliding window down to the bottom of the door box section.

❑ Detach the front side door glass run channel.

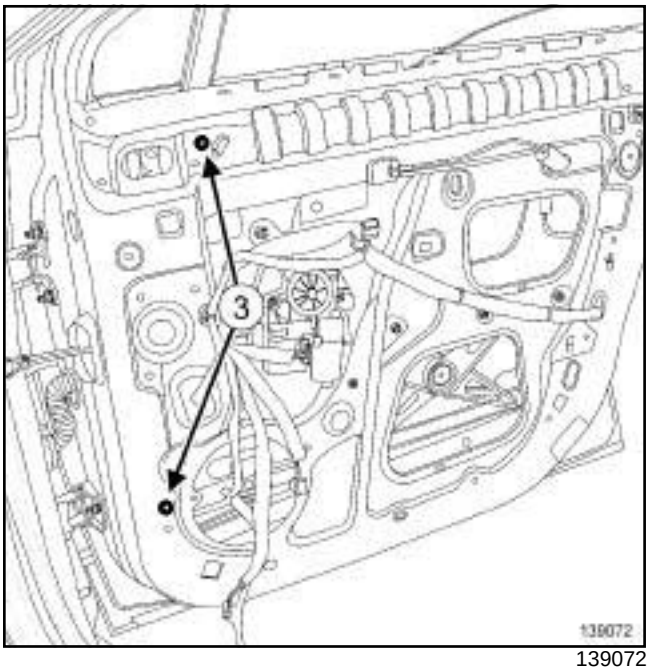

139072

❑ Remove:

- the fixed window pillar bolts (**3**) ,
- the fixed window pillar towards the bottom, then the back of the front side door.

J95

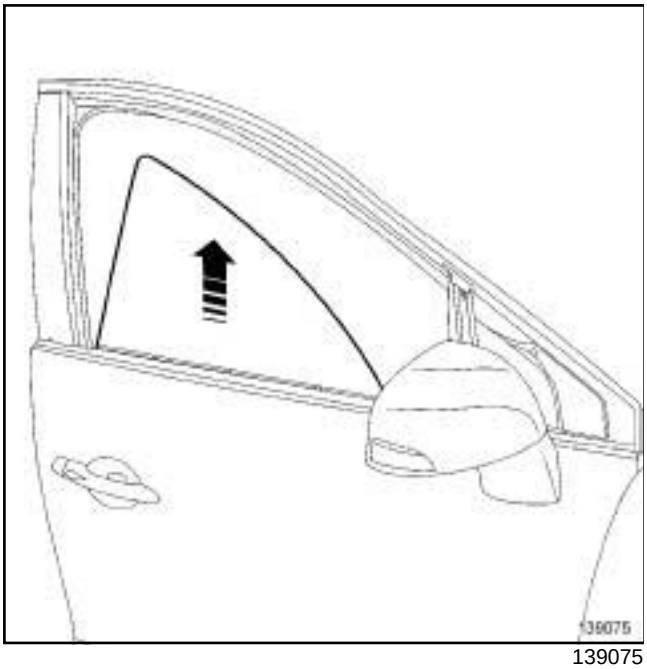

139075

❑ Remove the front side door sliding window.

REFITTING

I - REFITTING PREPARATION OPERATION

❑ **parts always to be replaced: front side opening element sliding window bolt (50,04,06,05)**.

II - REFITTING OPERATION FOR PART CONCERNED

❑ Refit:

- the front side door sliding window,
- the fixed window pillar,
- the fixed window pillar bolts ***(3)*** .

❑ Fit the front side door glass run channel on the fixed window pillar.

❑ Refit:

- the front side door sliding window on the electric window mechanism,
- the new bolts ***(2)*** .

III - FINAL OPERATION

❑ Refit the blanking cover ***(1)*** .

❑ Remove the side impact sensor protection.

❑ Refit:

- the front side door interior weatherstrip,
- the front side door exterior weatherstrip (see **Front door side exterior weather strip: Removal - Refitting**) (66A, Opening element sealing).

❑ Connect the battery (see **Battery: Removal - Refitting**) (80A, Battery).

❑ Carry out a function test.

❑ Refit:

- the front speaker (see **Front speakers: Removal - Refitting**) (86A, Radio),
- the sealing film (see **Door sealing film: Removal - Refitting**) (65A, Opening element sealing).

❑ Carry out a sealing test (see **Technical Note 0653A**).

❑ Refit the front side door trim (see **Front side door trim: Removal - Refitting**) (72A, Side opening elements trim).

B95 or J95 or K95

REMOVAL

I - REMOVAL PREPARATION OPERATION

❑ Lower the rear side sliding door window to the low position.

❑ Remove:

- the rear side door trim (see **Rear side door trim: Removal - Refitting**) (72A, Side opening element trim),
- the door sealing film (see **Door sealing film: Removal - Refitting**) (65A, Opening element sealing),
- the interior weatherstrip.

B95

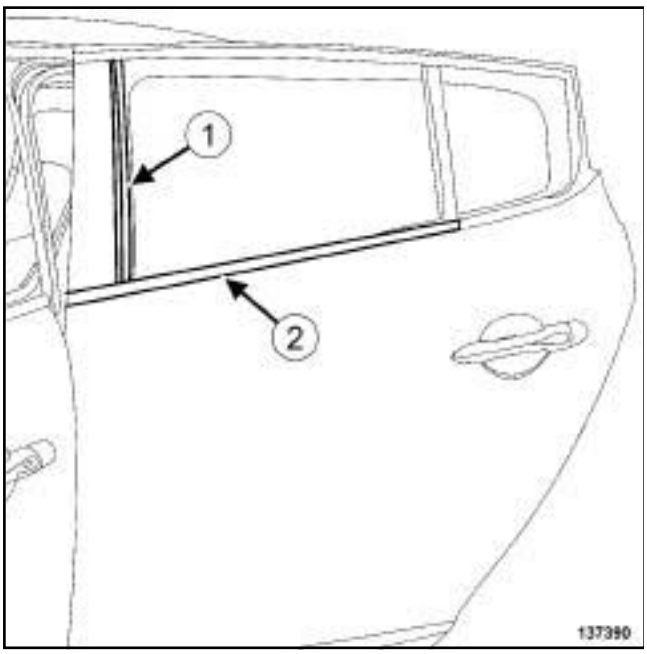

137390

❑ Remove:

- partially the rear side door window glass run channel (**1**) ,
- partially the exterior weatherstrip (**2**) ,
- the rear speaker (see **Rear speakers: Removal - Refitting**) (86A, Radio).

J95

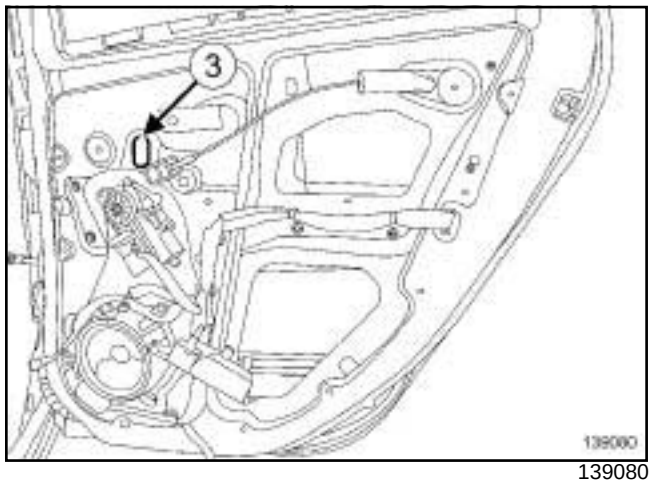

139080

❑ Remove:

- the blanking cover (**3**) ,
- the exterior weatherstrip,
- the rear side door pillar exterior trim (see **55A**, **Exterior protection**, **Rear side door pillar exterior trim Removal - Refitting**, page **55A-34**) .

B95 or J95 or K95

II - OPERATION FOR REMOVAL OF PART CONCERNED

B95

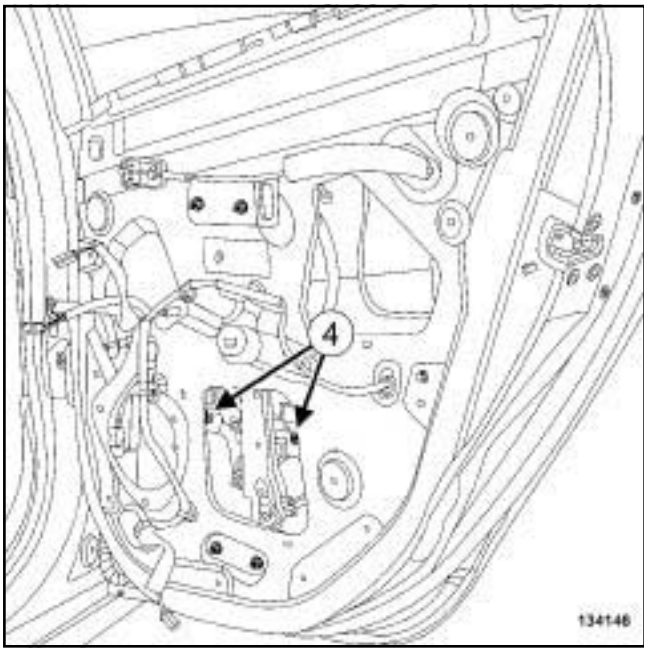

134146

❑ Remove the bolts (**4**) from the rear side door sliding window.

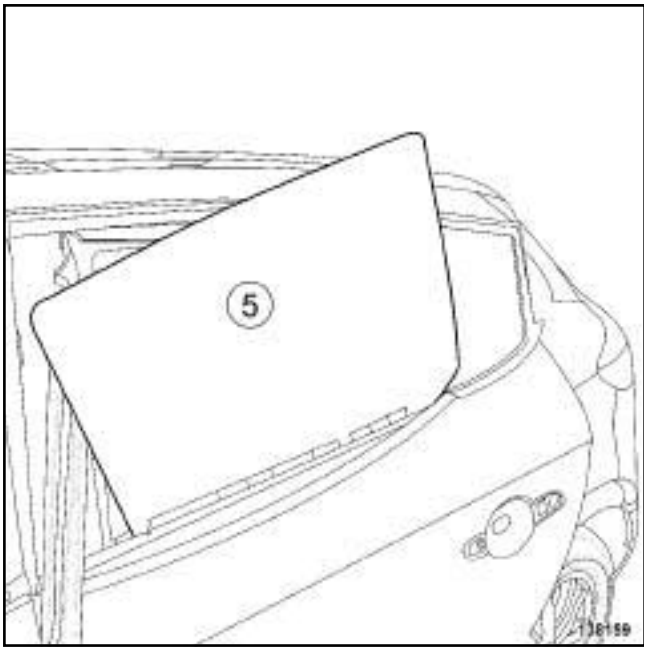

138159

❑ Remove the sliding window from the rear side door (**5**) .

J95

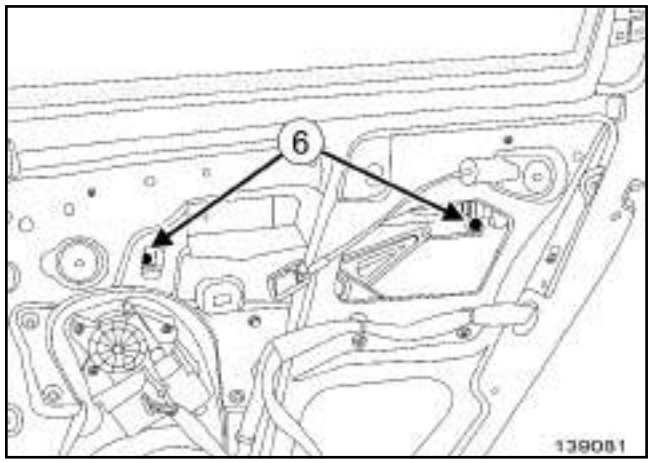

139081

❑ Remove the bolts (**6**) .

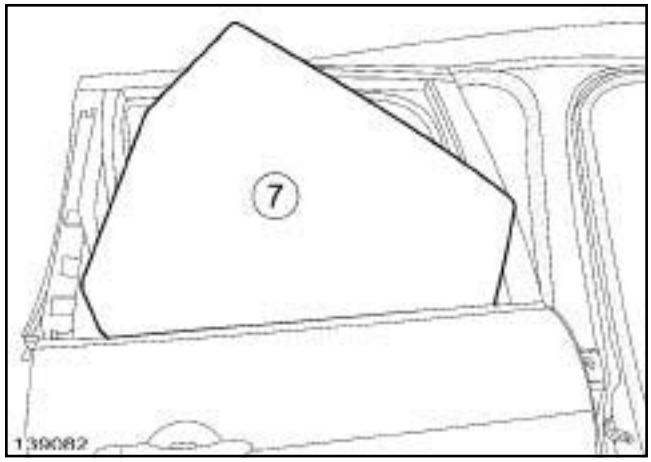

139082

❑ Remove the sliding window from the rear side door (**7**) .

REFITTING

I - REFITTING PREPARATION OPERATION

❑ **parts always to be replaced: rear side opening element sliding window bolt (50,04,08,07)**.

II - REFITTING OPERATION FOR PART CONCERNED

❑ Refit:

- the rear side sliding door window,
- the rear side door sliding window bolts.

B95 or J95 or K95

III - FINAL OPERATION

J95

❏ Refit:

- the exterior weatherstrip,
- the blanking cover (**3**) ,
- the rear side door exterior trim (see **55A**, **Exterior protection**, **Rear side door pillar exterior trim Removal - Refitting**, page **55A-34**) .

B95

❏ Refit:

- the rear side door window glass run channel ***(1)*** ,
- the exterior weatherstrip ***(2)*** ,
- the rear speaker (see **Rear speakers: Removal - Refitting**) (86A, Radio).

❏ Carry out a function test.

❏ Refit the door sealing film (see **Door sealing film: Removal - Refitting**) (65A, Opening element sealing).

❏ Carry out a sealing test (see **Technical Note 0653A**).

❏ Refit the rear side door trim (see **Rear side door trim: Removal - Refitting**) (72A, Side opening element trim).

D95 or K95

Note:

The seal of the rear quarter panel window is moulded onto the rear quarter panel window. If the seal has deteriorated, always replace the rear quarter panel window.

REMOVAL

I - REMOVAL PREPARATION OPERATION

D95

❑ Remove:

- the door sill lining (see **Door sill lining: Removal - Refitting**) (71A, Body internal trim),
- the side roof rail rear trim (see **Rear roof drip moulding lining: Removal - Refitting**) (71A, Body internal trim),
- the rear wing panel trim (see **Rear panel trim: Removal - Refitting**) (71A, Body internal trim),
- the upper trim of the C-pillar (see **C-pillar upper trim: Removal - Refitting**) (71A, Body internal trim),
- the B-pillar upper trim (see **B-pillar upper trim: Removal - Refitting**) (71A, Body internal trim).

K95

❑ Remove:

- the rear inner sill upper trim (see **Rear door sill upper lining: Removal - Refitting**) (71A, Body internal trim),
- the rear parcel shelf side trim (see **Rear parcel shelf side trim: Removal - Refitting**) (71A, Body internal trim),
- the rear quarter panel trim (see **Rear quarter panel trim: Removal - Refitting**) (71A, Body internal trim).

❑ Protect the area around the rear quarter panel window with masking tape.

II - OPERATION FOR REMOVAL OF PART CONCERNED

D95

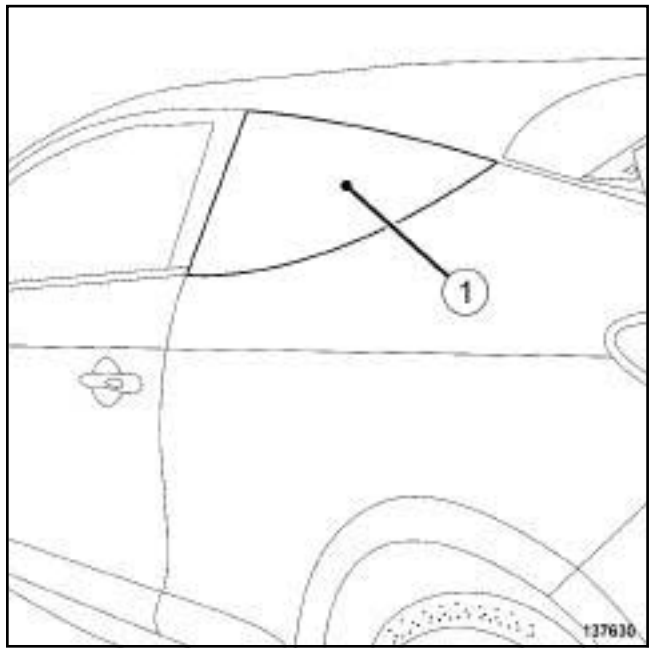

137630

❑ Cut the cement bead (see **Technical Note 560A**).

❑ Remove the rear quarter panel window ***(1)*** .

D95 or K95

K95

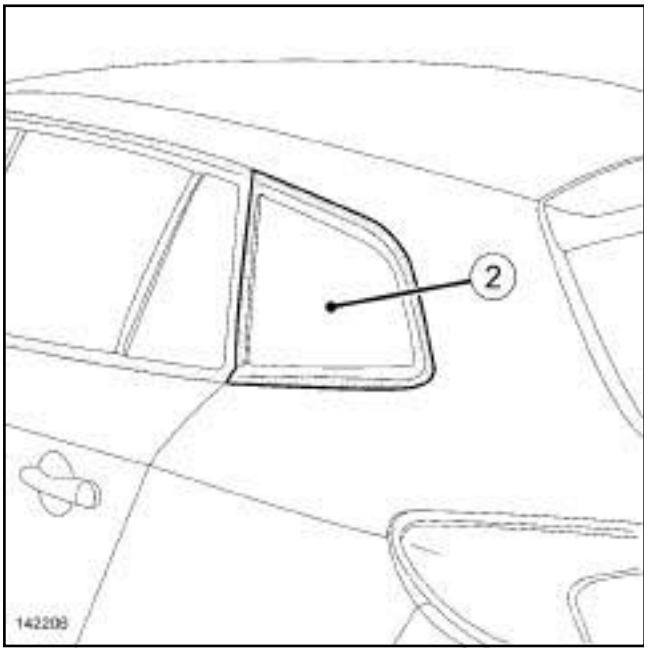

142206

❑ Cut the cement bead (see **Technical Note 560A**).

❑ Remove the rear quarter panel window (**2**) .

REFITTING

I - REFITTING PREPARATION OPERATION

❑ For preparation and bonding (see **Technical Note 560A**).

II - REFITTING OPERATION FOR PART CONCERNED

❑ Bond the rear quarter panel window.

❑ Equal out the clearances and shut lines.

III - FINAL OPERATION

D95

❑ Refit:

- the B-pillar upper trim (see **B-pillar upper trim: Removal - Refitting**) (71A, Body internal trim),
- the upper trim of the C-pillar (see **C-pillar upper trim: Removal - Refitting**) (71A, Body internal trim),
- the rear wing panel trim (see **Rear panel trim: Removal - Refitting**) (71A, Body internal trim),
- the side roof rail rear trim (see **Rear roof drip moulding lining: Removal - Refitting**) (71A, Body internal trim),
- the door sill lining (see **Door sill lining: Removal - Refitting**) (71A, Body internal trim).

K95

❑ Refit:

- the rear quarter panel trim (see **Rear quarter panel trim: Removal - Refitting**) (71A, Body internal trim).
- the rear parcel shelf side trim (see **Rear parcel shelf side trim: Removal - Refitting**) (71A, Body internal trim),
- the rear inner sill upper trim (see **Rear door sill upper lining: Removal - Refitting**) (71A, Body internal trim).

J95

Note:

The rear quarter panel window seal is moulded onto the rear quarter panel window. If the seal has deteriorated, always replace the rear quarter panel window.

REMOVAL

I - REMOVAL PREPARATION OPERATION

❏ Remove:

- the rear panel trim (see **Rear end panel lining: Removal - Refitting**) (71A, Body internal trim),
- the rear parcel shelf side trim (see **Rear parcel shelf side trim: Removal - Refitting**) (71A, Body internal trim),
- the rear inner sill upper trim (see **Rear door sill upper lining: Removal - Refitting**) (71A, Body internal trim),
- the rear wheel arch trim (see **Rear wheel arch lining: Removal - Refitting**) (71A, Body internal trim),
- the rear quarter panel trim (see **Rear quarter panel trim: Removal - Refitting**) (71A, Body internal trim).

❏ Protect the edge of the rear quarter panel window using masking tape.

Note:

When carrying out any work on the bodywork, protect the seal with a spatula when cutting. The window is supplied for replacements as a spare part with its moulded seal.

II - OPERATION FOR REMOVAL OF PART CONCERNED

LONG CHASSIS

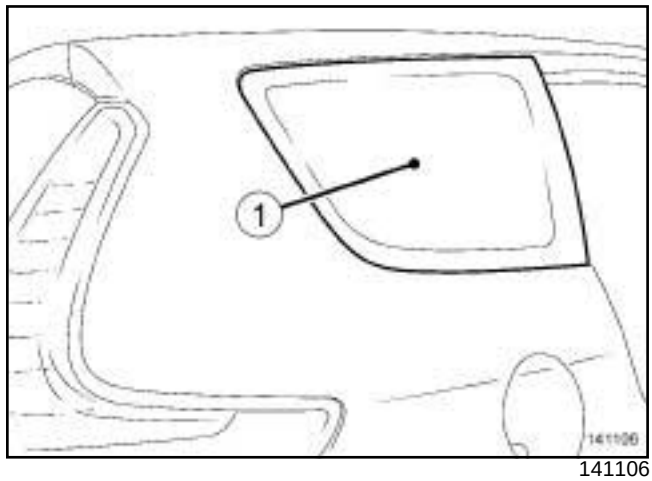

141106

❏ Cut the cement bead (see **Technical Note 560A**).

❏ Remove the rear quarter panel window (**1**) .

STANDARD CHASSIS

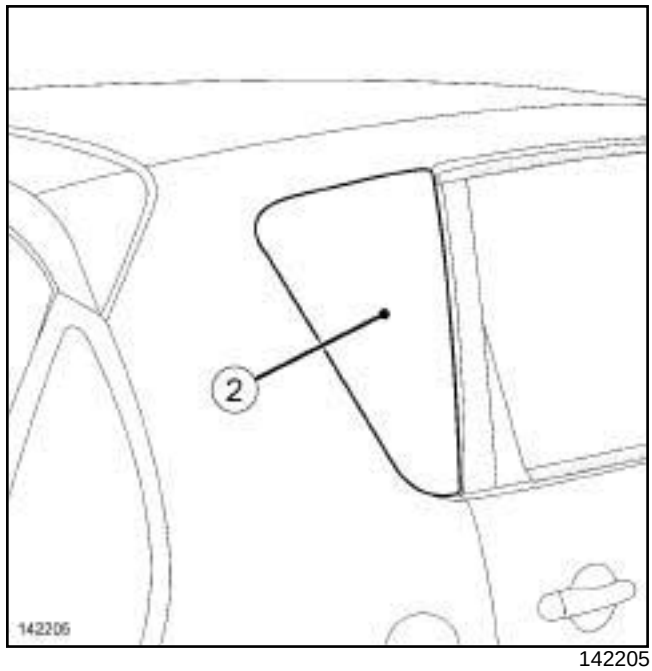

142205

❏ Cut the cement bead (see **Technical Note 560A**).

❏ Remove the rear quarter panel window (**2**) .

J95

REFITTING

I - REFITTING PREPARATION OPERATION

- **parts always to be replaced: Rear quarter panel window adjusting shim (50,04,10,03)**.
- For preparation and bonding (see **Technical Note 560A**).

II - REFITTING OPERATION FOR PART CONCERNED

- Bond the rear quarter panel window.
- Equal out the clearances and shut lines.

III - FINAL OPERATION

- Remove the protection on the edge of the rear quarter panel window.
- Refit:
  - the rear quarter panel trim (see **Rear quarter panel trim: Removal - Refitting**) (71A, Body internal trim).
  - the rear wheel arch trim (see **Rear wheel arch lining: Removal - Refitting**) (71A, Body internal trim),
  - the rear inner sill upper trim (see **Rear door sill upper lining: Removal - Refitting**) (71A, Body internal trim),
  - the rear parcel shelf side trim (see **Rear parcel shelf side trim: Removal - Refitting**) (71A, Body internal trim),
  - the rear panel trim (see **Rear end panel lining: Removal - Refitting**) (71A, Body internal trim).

B95 or K95

REMOVAL

I - REMOVAL PREPARATION OPERATION

K95

❑ Remove the rear side door exterior weatherstrip (see **Rear side door exterior weather strip: Removal - Refitting**) (66A, Window sealing).

❑ Remove:

- the rear side door trim (see **Rear side door trim: Removal - Refitting**) (72A, Side opening element trim),
- the interior weatherstrip,
- the door sealing film (see **Door sealing film: Removal - Refitting**) (65A, Opening element sealing),
- the rear speaker (see **Rear speakers: Removal - Refitting**) (86A, Radio),
- the rear side sliding door window (see **54A**, **Windows**, **Sliding window in rear side door: Removal - Refitting**, page **54A-7**) ,
- partially the rear side door pillar exterior trim (see **55A**, **Exterior protection**, **Rear side door pillar exterior trim Removal - Refitting**, page **55A-34**) .

B95

❑ Remove the rear side door "fixed window - glass run channel - exterior weatherstrip" assembly (see **Glass run channel in rear side door: Removal - Refitting**) (66A, Window sealing).

K95

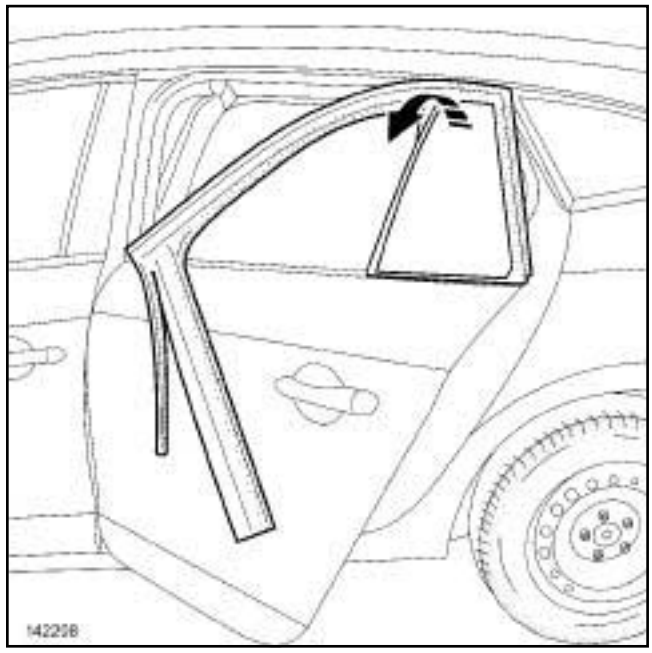

142208

❑ Remove the rear side door "fixed window - glass run channel" assembly (see **Glass run channel in rear side door: Removal - Refitting**) (66A, Window sealing).

II - OPERATION FOR REMOVAL OF PART CONCERNED

K95

❑ Separate the rear side door fixed window from the rear side door glass run channel.

B95

❑ Separate the rear side door fixed window from the exterior weatherstrip on the rear side door glass run channel.

B95 or K95

REFITTING

I - REFITTING OPERATION FOR PART CONCERNED

K95

❑ Assemble the rear side door window "glass run channel - fixed window" assembly.

B95

❑ Assemble the rear side door "glass run channel - exterior weatherstrip - fixed window" assembly.

II - FINAL OPERATION

K95

❑ Refit the rear side door window "glass run channel - fixed window" assembly (see **Glass run channel in rear side door: Removal - Refitting**) (66A, Window sealing).

B95

❑ Refit the rear side door "fixed window - glass run channel - exterior weatherstrip" assembly (see **Glass run channel in rear side door: Removal - Refitting**) (66A, Window sealing).

❑ Refit:

- the rear side door pillar exterior trim (see **55A**, **Exterior protection**, **Rear side door pillar exterior trim Removal - Refitting**, page **55A-34**) ,
- the rear side sliding door window (see **54A**, **Windows**, **Sliding window in rear side door: Removal - Refitting**, page **54A-7**) ,
- the rear speaker (see **Rear speakers: Removal - Refitting**) (86A, Radio),
- the door sealing film (see **Door sealing film: Removal - Refitting**) (65A, Opening element sealing).

K95

❑ Refit the rear side door exterior weatherstrip (see **Rear side door exterior weather strip: Removal - Refitting**) (66A, Window sealing).

❑ Carry out a sealing test (see **Technical Note 0653A)**.

❑ Refit:

- the interior weatherstrip,
- the rear side door trim (see **Rear side door trim: Removal - Refitting**) (72A, Side opening element trim).

REMOVAL

I - REMOVAL PREPARATION OPERATION

❏ Remove:

- the tailgate trim (see **Tailgate lining: Removal - Refitting**) (73A, Non-side opening elements trim),
- the rear screen wiper arm (see **Rear screen wiper arm: Removal - Refitting**) (85A, Washing - Wiping),
- the rear screen wiper motor (see **Rear screen wiper motor: Removal - Refitting**) (85A, Washing - Wiping).

B95 or J95

❏ Remove the high level brake light (see **3rd brake light: Removal - Refitting**) (81A, Rear lighting).

D95

❏ Remove the tailgate spoiler (see **56A**, **Exterior equipment**, **Tailgate spoiler: Removal - Refitting**, page **56A-6**) .

❏ Disconnect the rear screen de-icer connectors.

❏ Protect the edge of the rear screen window with masking tape.

II - OPERATION FOR REMOVAL OF PART CONCERNED

K95

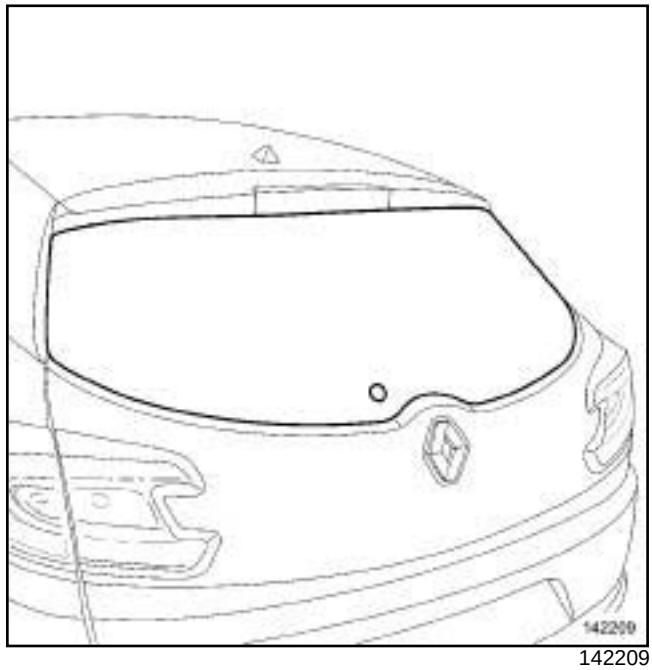

142209

❏ Cut the cement bead; (see **Technical Note 560A**) (this operation requires two people).

B95 or D95 or J95

❏ Cut the cement bead (see **Technical Note 560A**).

❏ Remove the rear screen (this operation requires two people).

REFITTING

I - REFITTING PREPARATION OPERATION

❏ **parts always to be replaced: Rear screen adjusting shim (50,04,12,03)**.

❏ For preparation and bonding (see **Technical Note 560A**).

❏ Refit the rear screen wiper motor (see **Rear screen wiper motor: Removal - Refitting**) (85A, Wiping - Washing).

II - REFITTING OPERATION FOR PART CONCERNED

- ❏ Bond the rear screen (this operation requires two people).
- ❏ Equal out the clearances and shut lines.

III - FINAL OPERATION

- ❏ Connect the rear screen de-icer connectors.
- ❏ Remove the masking tape.

D95

- ❏ Refit the tailgate spoiler (see **56A**, **Exterior equipment**, **Tailgate spoiler: Removal - Refitting**, page **56A-6**) .

B95 or J95

- ❏ Refit the high level brake light (see **3rd brake light: Removal - Refitting**) (81A, Rear lighting).

- ❏ Refit the rear screen wiper arm (see **Rear screen wiper arm: Removal - Refitting**) (85A, Wiping - Washing).
- ❏ Carry out a function test.
- ❏ Refit the tailgate trim (see **Tailgate lining: Removal - Refitting**) (73A, Non-side opening elements trim).
- ❏ Remove the tabs from the stops once the adhesive has dried.

PANORAMIC SUNROOF

Essential special tooling	
Car. 1033	Windscreen mastic cutting wire inserting tool.

IMPORTANT

To avoid all risk of damage to the systems, apply the safety and cleanliness instructions and operation recommendations before carrying out any repair:

- (see **Airbag and Pretensioners: Precautions for repair**) (88C, Airbags and pretensioners),
- (see **Vehicle: Precautions for repair**) (01D, Mechanical introduction).

Note:

If the sunroof fixed window is cracked:

- disconnect the battery (see **Battery: Removal - Refitting**) (80A, Battery),
- remove the headlining (see **Headlining: Removal - Refitting**) (71A, Body internal trim).

REMOVAL

I - REMOVAL PREPARATION OPERATION

❑ Disconnect the battery (see **Battery: Removal - Refitting**) (80A, Battery).

❑ Remove the headlining (see **Headlining: Removal - Refitting**) (71A, Body internal trim).

K95

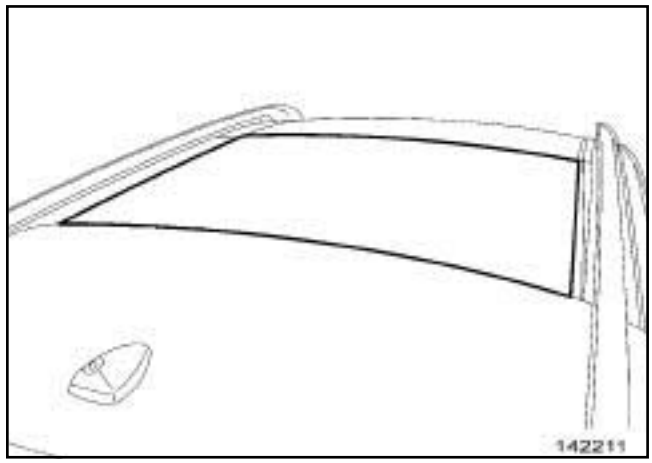

142211

❑ Protect:

- the area around the sunroof fixed window with masking tape,
- the sunroof side trims using masking tape,
- the inside of the vehicle.

B95 or J95

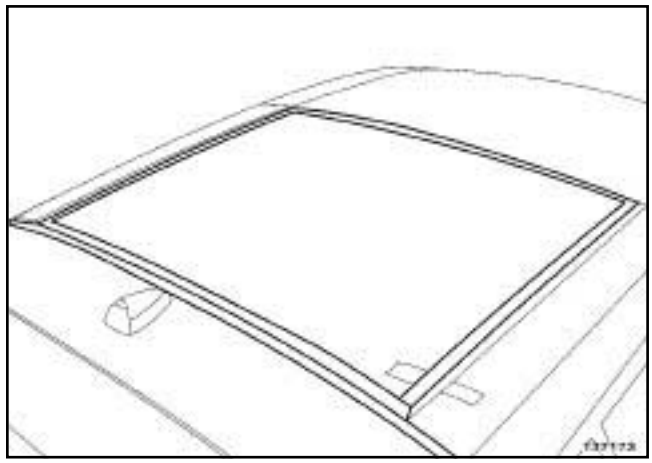

137173

❑ Protect:

- the area around the sunroof fixed window with masking tape,
- the sunroof side trims using masking tape,
- the inside of the vehicle.

PANORAMIC SUNROOF

B95

❑ Protect the mechanism cover seals using masking tape (if necessary raise the mechanism covers and hold them using masking tape).

II - OPERATION FOR REMOVAL OF PART CONCERNED

J95

❑ Pass the tool **(Car. 1033)** to the rear section of the window and slide the cutting wire between the fixed window and the sunroof operating mechanism.

❑ Cut the cement bead (see **Technical Note 560A**) (this operation requires two people).

B95 or K95

❑ Pass the tool **(Car. 1033)** in the rear right- or left-hand section of the sunroof fixed window, taking care not to damage the mechanism cover seals.

❑ Collect the cutting wire and leave it inside the vehicle until needed.

❑ Slide:

- the cutting wire between the sunroof operating mechanism and the fixed window,
- the cutting wire around the outside edge.

> Note:
>
> When routing the cutting wire into the vehicle interior, be careful not to cross the two wires, as this would make cutting the seal impossible.

❑ Cut a sufficient length of cutting wire.

❑ Route the cutting wire inside the vehicle using the tool **(Car. 1033)**.

❑ Fit the cutting handles on the two sections of the cutting wire inside the vehicle.

❑ Cut the cement bead and leave the other handle in place until it is needed.

> Note:
>
> Reduce the length of the cutting wire as you cut.

❑ Remove the sunroof fixed window (this operation requires two people).

REFITTING

I - REFITTING PREPARATION OPERATION

❑ **parts always to be replaced: Roof opening element fixed window adjusting shim (50,04,22,04)**.

❑ For preparation and bonding (see **Technical Note 560A**).

II - REFITTING OPERATION FOR PART CONCERNED

❑ Bond the sunroof fixed window (this operation requires two people).

PANORAMIC SUNROOF

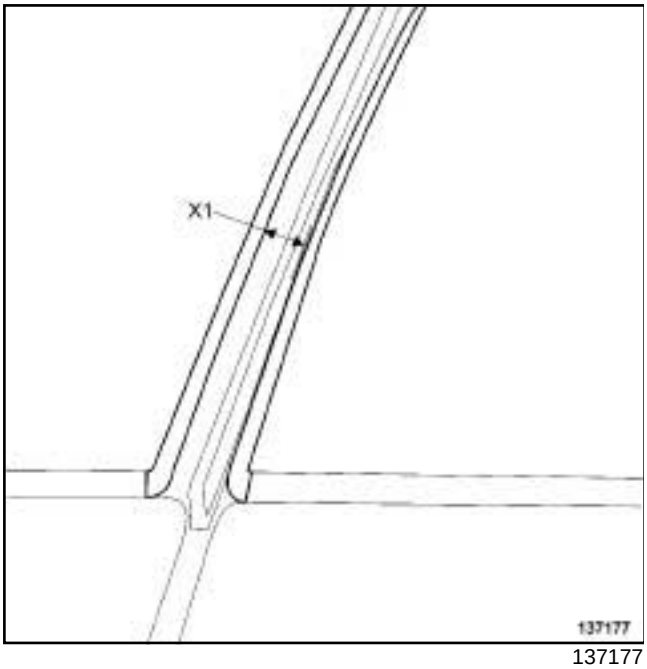

137177

- Observe the clearance of (**X1**) = **8 mm** between the sunroof fixed window and the sunroof mobile panel.
- The sunroof fixed window should be slightly lower than the sunroof mobile panel.

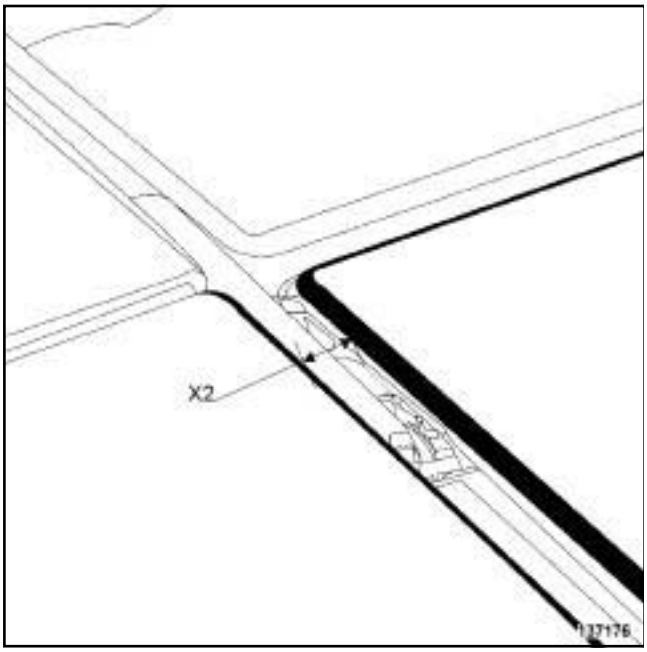

137176

- Balance the lateral clearances of (**X2**) = **13 mm** between the window and the side trims.

III - FINAL OPERATION

- Remove the masking tape.
- Refit the headlining (see **Headlining: Removal - Refitting**) (71A, Body internal trim).
- Connect the battery (see **Battery : Removal - Refitting**) (80A, Battery).

PANORAMIC SUNROOF

REMOVAL

I - REMOVAL PREPARATION OPERATION

K95

❑ Remove the roof bar (see **56A**, **Exterior equipment**, **Roof rack bar: Removal - Refitting**, page **56A-20**) (56A, Exterior equipment).

1 - Sunroof side trim, front section

❑ Protect the edge of the roof and windows using masking tape.

2 - Sunroof side trim, rear section

❑ Protect the edge of the roof and windows using masking tape.

B95

❑ Remove the mechanism cover side seal from the sunroof rear side trim.

II - OPERATION FOR REMOVAL OF PART CONCERNED

1 - Sunroof side trim, front section

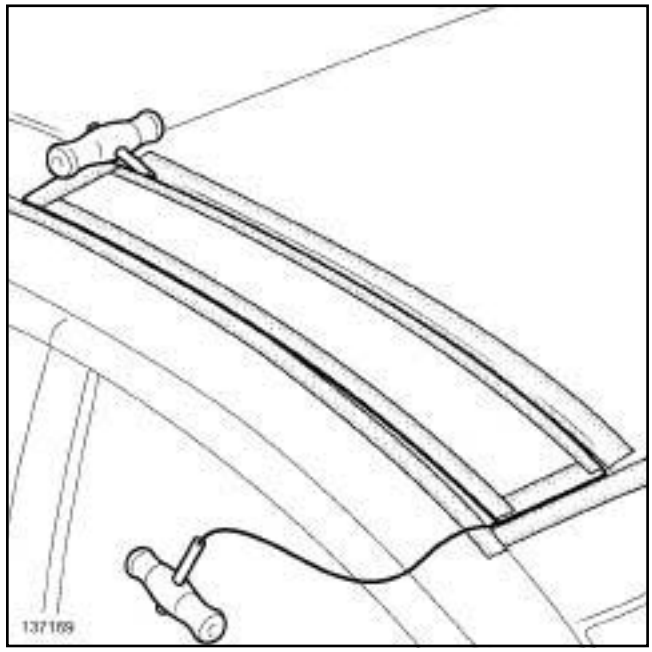

137169

❑ Be sure to pass the cutting wire between the sunroof side trim and the sunroof operating mechanism finishing seal.

❑ Pass the cutting wire under the sunroof side trim.

❑ Cut the cement bead from the front to the rear using a cutting wire with two handles.

❑ Remove the sunroof front side trim.

PANORAMIC SUNROOF

2 - Sunroof side trim, rear section

K95

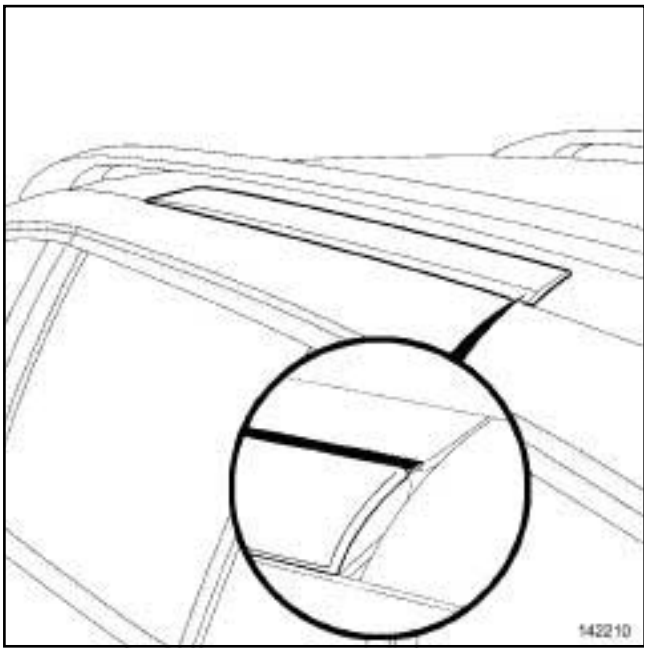

142210

❑ Be sure to pass the cutting wire between the sunroof side trim and the sunroof operating mechanism.

B95 or J95

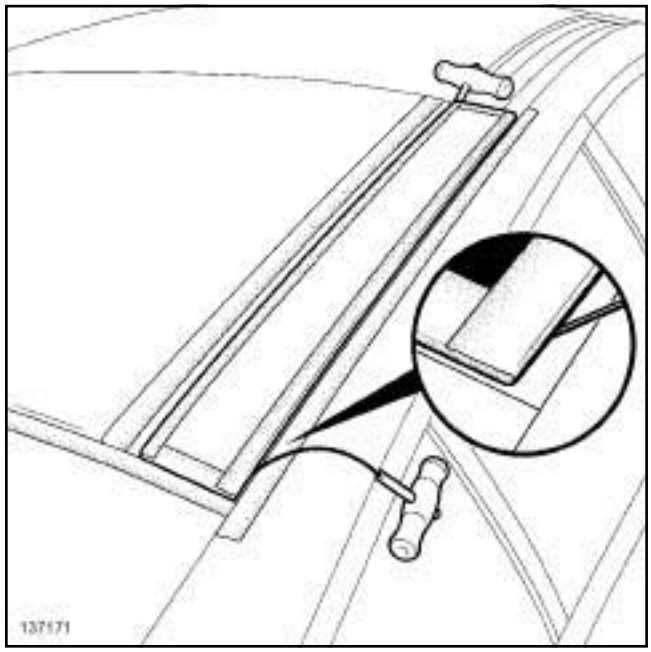

137171

❑ Be sure to pass the cutting wire between the sunroof side trim and the sunroof operating mechanism finishing seal.

❑ Pass the cutting wire under the sunroof side trim.

❑ Cut the cement bead from the rear to the front using a cutting wire with two handles.

❑ Remove the sunroof rear side trim.

REFITTING

I - REMOVAL PREPARATION OPERATION

❑ **parts always to be replaced: Roof opening element fixed window adjusting shim (50,04,22,04)**.

❑ For preparation and bonding (see **Technical Note 560A**).

II - REFITTING OPERATION FOR PART CONCERNED

❑ Position the positioning shims on the marks of the sunroof operating mechanism.

PANORAMIC SUNROOF

B95

- ❑ Refit the mechanism cover side seal on the sunroof rear side trim.

- ❑ Bond:
  - the sunroof rear side trim first,
  - the sunroof front side trim second.
- ❑ Respect the clearances and flush-fittings.

III - FINAL OPERATION

- ❑ Remove the masking tape.
- ❑ Perform a function test of the sunroof mobile panel.

Essential special tooling	
Car. 1363	Set of trim removal levers.

REMOVAL

I - REMOVAL PREPARATION OPERATION

❑ Position the vehicle on a two-post lift (see **Vehicle: Towing and lifting**) (02A, Lifting equipment).

❑ Remove:

- the front wheels (see **Wheel: Removal - Refitting**) (35A, Wheels and tyres),
- the front section of the wheel arch liners (see **55A**, **Exterior protection**, **Front wheel arch liner: Removal - Refitting**, page **55A-24**) .

B95 or D95 or K95

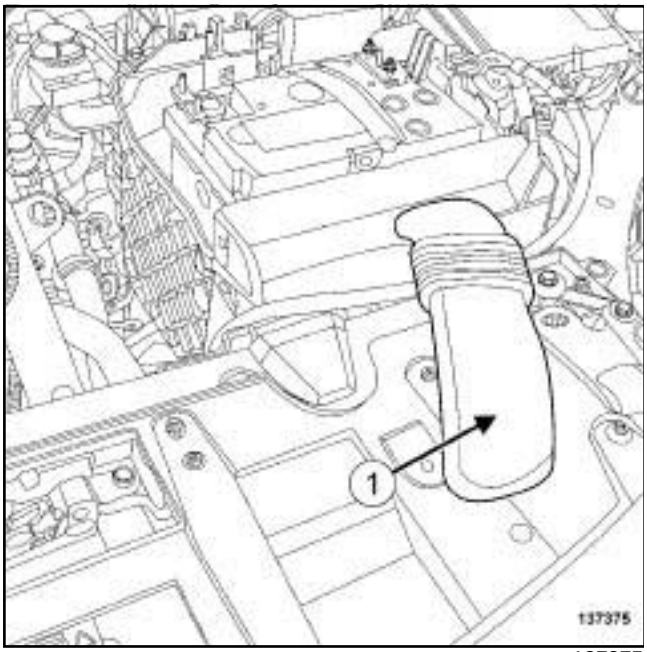

137375

❑ Remove the upper air duct (**1**) .

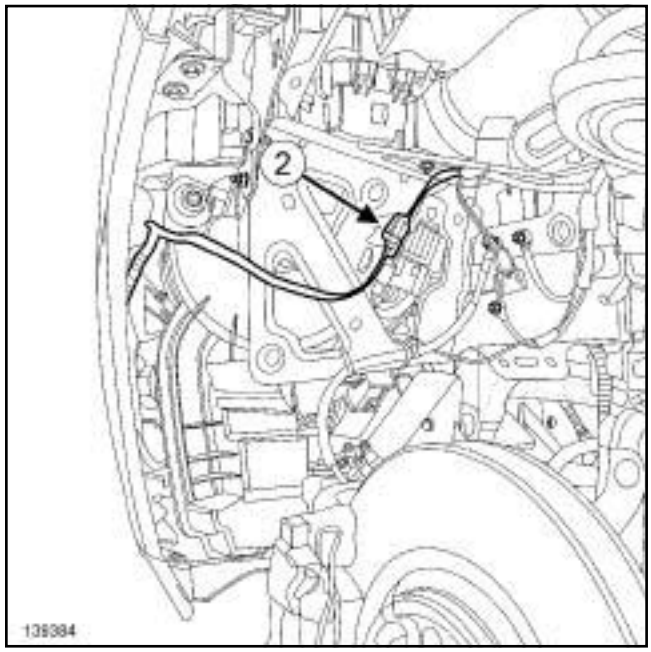

139384

❑ Unclip the connector.

❑ Disconnect the bumper wiring connector (**2**) .

FR AND RR PROX RADAR

❑ Disconnect the bumper wiring connector.

II - OPERATION FOR REMOVAL OF PART CONCERNED

B95 or D95 or K95

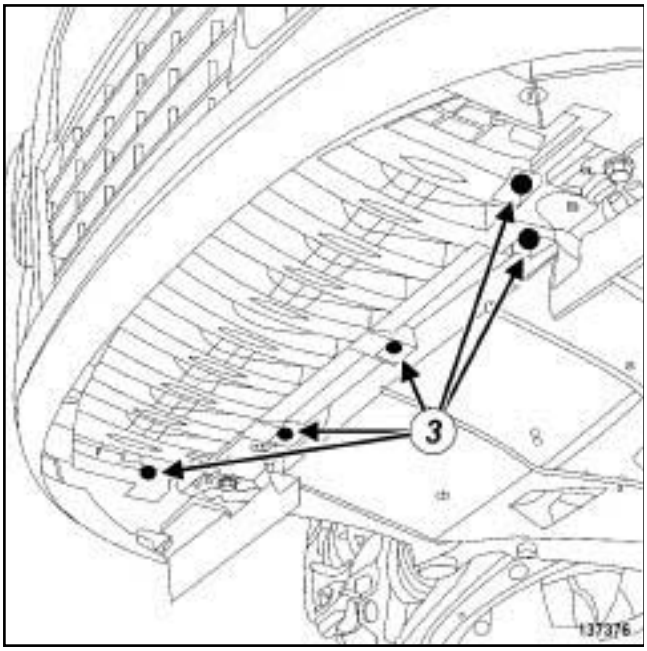

137376

❑ Remove the bolts (**3**) .

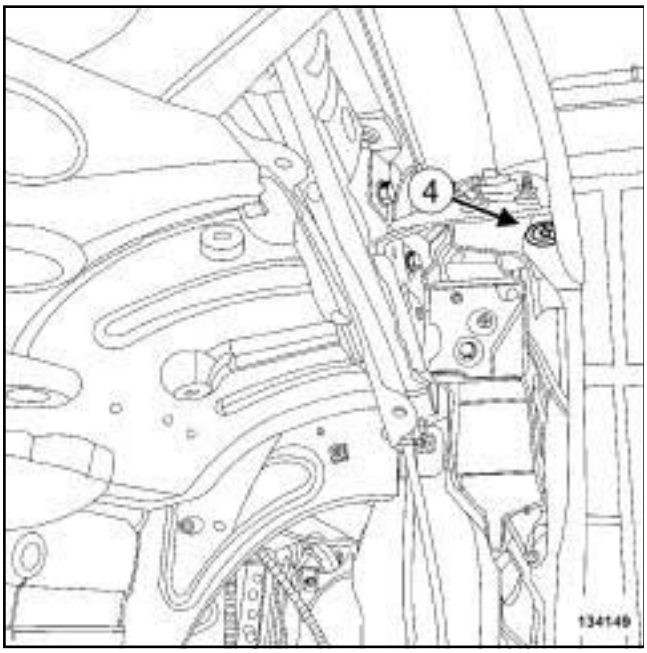

134149

❑ Remove the bolts (**4**) .

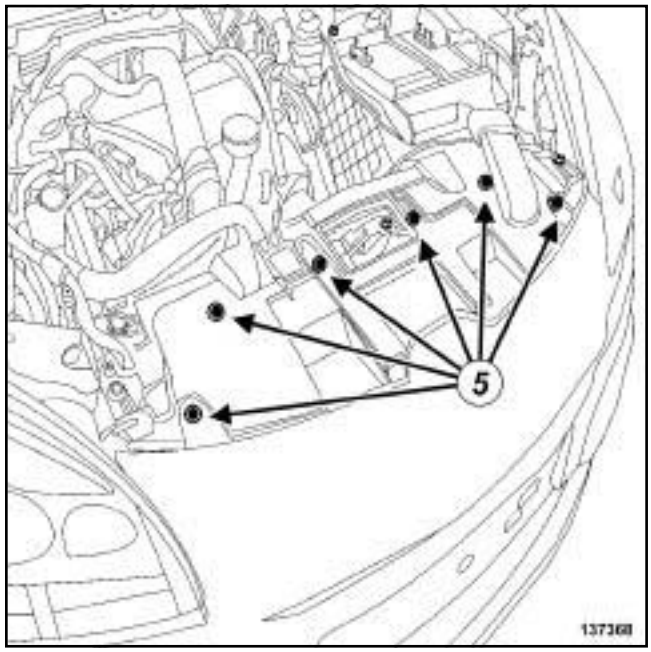

137368

❑ Remove the bolts (**5**) .

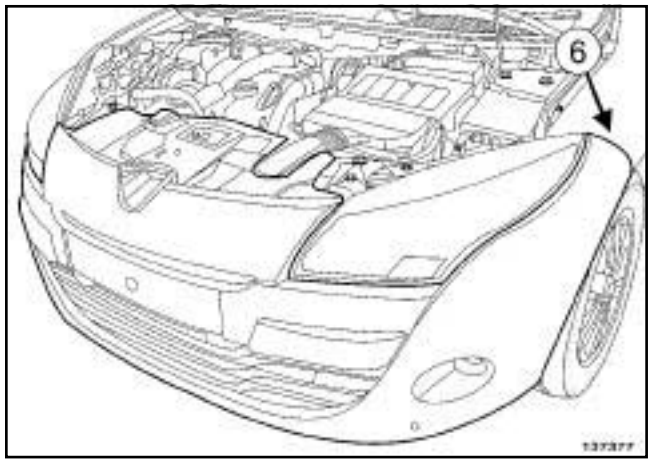

137377

❑ Unclip the side sections of the front bumper at (**6**) using the tool **(Car. 1363)**.

❑ Slightly lift the upper section of the front bumper.

J95

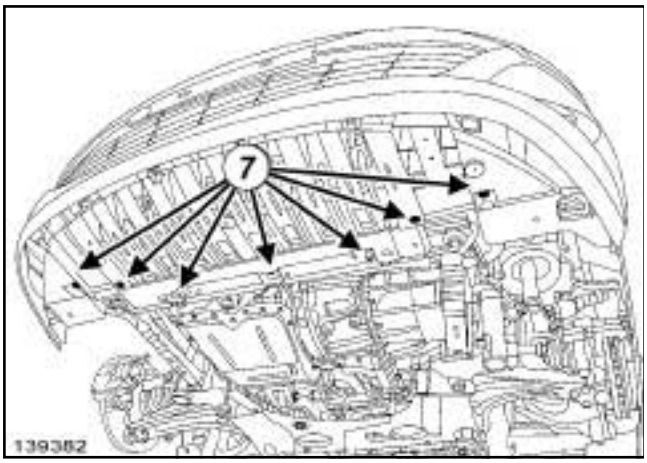

139382

❑ Remove the bolts (**7**) .

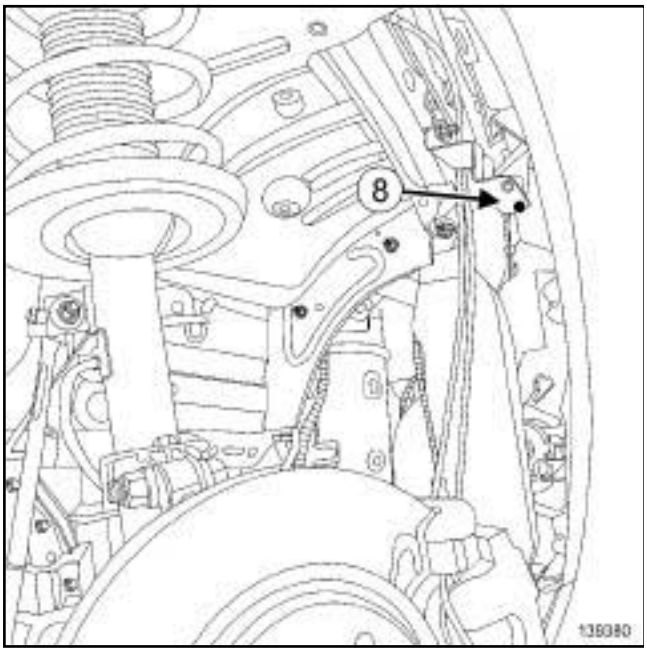

139380

❑ Remove the bolts (**8**) .

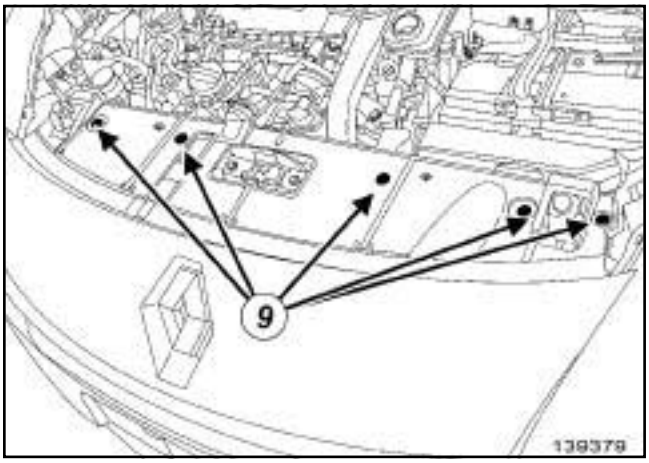

139379

❑ Remove the bolts (**9**) .

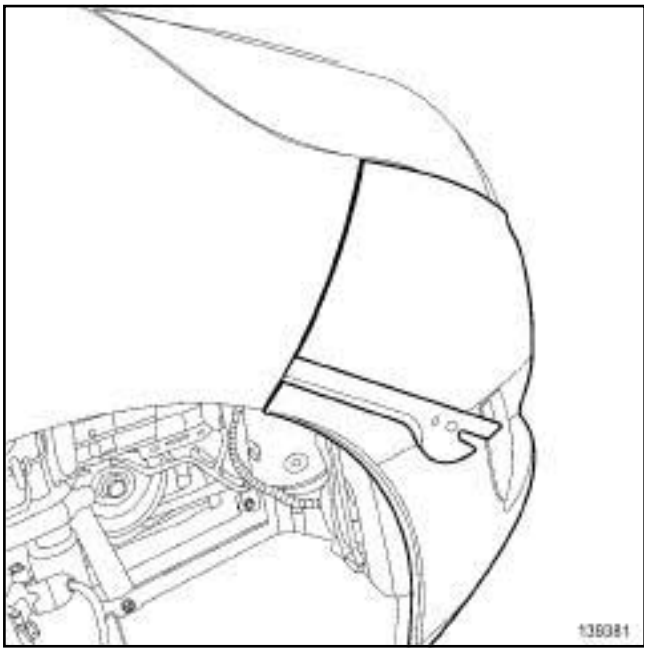

139381

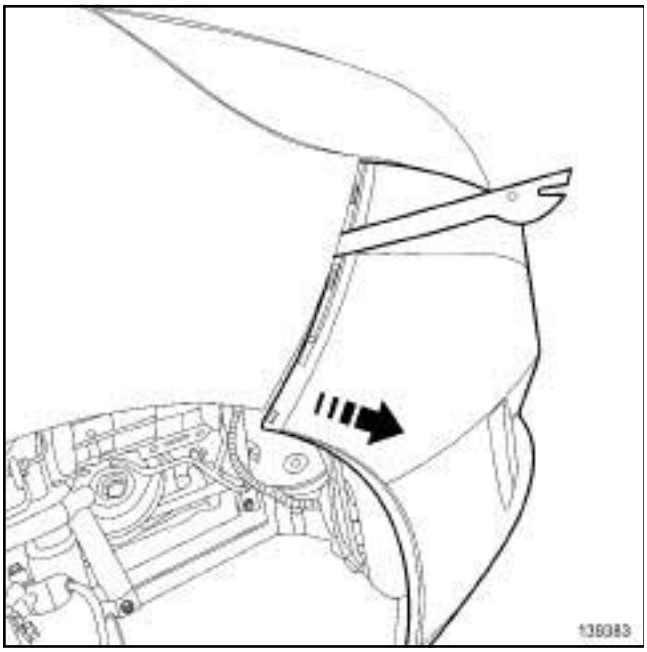

139383

❑ Unclip the side sections of the front bumper using the tool **(Car. 1363)**.

❑ Slightly lift the upper section of the front bumper.

HEADLIGHT WASHERS WITH BLADE

❑ Partially remove the front bumper (this operation requires two people).

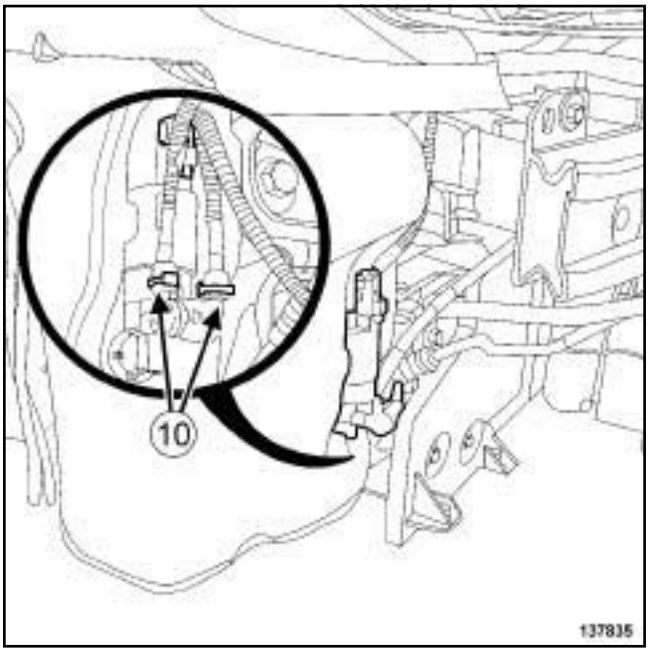

137835

❑ Disconnect the headlight washer pipes (**10**) .

❑ Remove the front bumper (this operation requires two people).

REFITTING

I - REFITTING OPERATION FOR PART CONCERNED

HEADLIGHT WASHERS WITH BLADE

❑ Connect the headlight washer pipes ***(10)*** .

❑ Refit the front bumper by sliding it correctly in its guides (this operation requires two people).

❑ Clip on the side sections of the front bumper.

B95 or D95 or K95

❑ Refit:

- the bolts ***(5)*** ,
- the bolts ***(4)*** ,
- the bolts ***(3)*** .

J95

❑ Refit:

- the bolts ***(9)*** ,
- the bolts ***(8)*** ,
- the bolts ***(7)*** .

II - FINAL OPERATION

❑ Connect the connector ***(2)*** .

❑ Clip on the connector.

FR AND RR PROX RADAR

❑ Refit the bumper wiring connector.

FR AND RR PROX RADAR, and HEADLIGHT WASHERS WITH BLADE

❑ Carry out a function test.

B95 or D95 or K95

❑ Refit the upper air duct ***(1)*** .

❑ Refit:

- the front section of the wheel arch liners (see **55A**, **Exterior protection**, **Front wheel arch liner: Removal - Refitting**, page **55A-24**) ,
- the front wheels (see **Wheel: Removal - Refitting**) (35A, Wheels and tyres).

Essential special tooling	
Car. 1363	Set of trim removal levers.

STRIPPING

I - STRIPPING PREPARATION OPERATION

❑ Position the vehicle on a two-post lift (see **Vehicle: Towing and lifting**) (02A, Lifting equipment).

❑ Remove:

- the front wheels (see **Wheel: Removal - Refitting**) (35A, Wheels and tyres),
- the front section of the wheel arch liners (see **55A**, **Exterior protection**, **Front wheel arch liner: Removal - Refitting**, page **55A-24**) ,
- the front bumper (see **55A**, **Exterior protection**, **Front bumper: Removal - Refitting**, page **55A-1**) .

II - STRIPPING OPERATION FOR PART CONCERNED

FOG LIGHT

❑ Remove the front fog lights (see **Front fog light: Removal - Refitting**) (80B, Headlights).

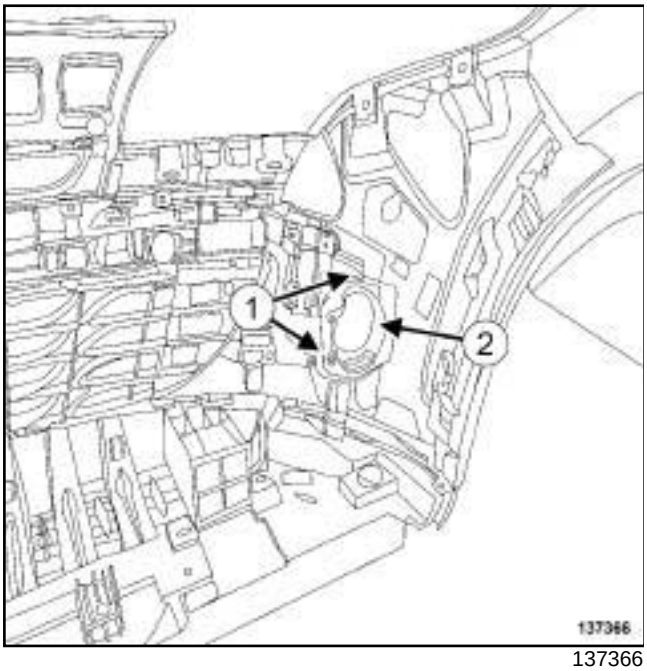

137366

❑ Remove:

- the bolts (**1**) ,
- the trim pieces (**2**) .

HEADLIGHT WASHERS WITH BLADE

❑ Remove the headlight washer jets (see **Headlight washer jet: Removal - Refitting**) (85A, Wiping - Washing).

FR AND RR PROX RADAR

❑ Remove the proximity radars (see **Proximity radar Removal - Refitting**) (87F, Parking distance control).

FOG LIGHT, and FR AND RR PROX RADAR

❑ Remove the front bumper wiring (see **Front bumper wiring: Removal - Refitting**) (88A, Wiring).

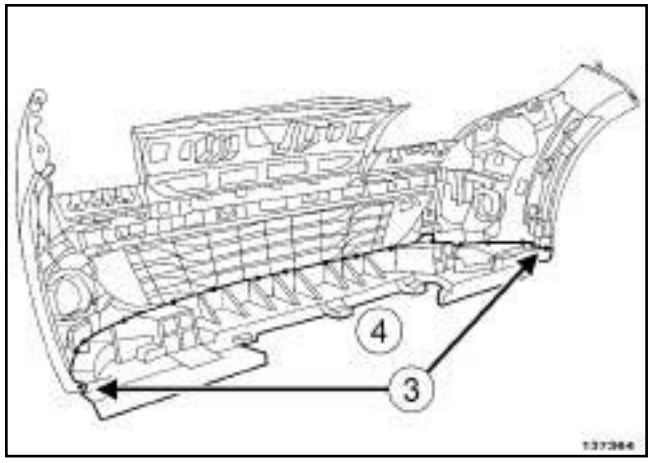

137364

❑ Drill out the rivets (**3**) .

❑ Unclip the diffuser (**4**) .

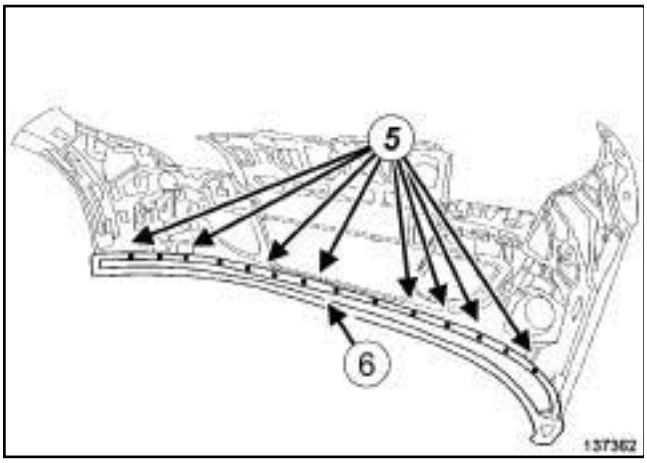

137362

❏ Cut the clips (**5**) .

❏ Unclip the aerodynamic component (**6**) .

B95 or K95

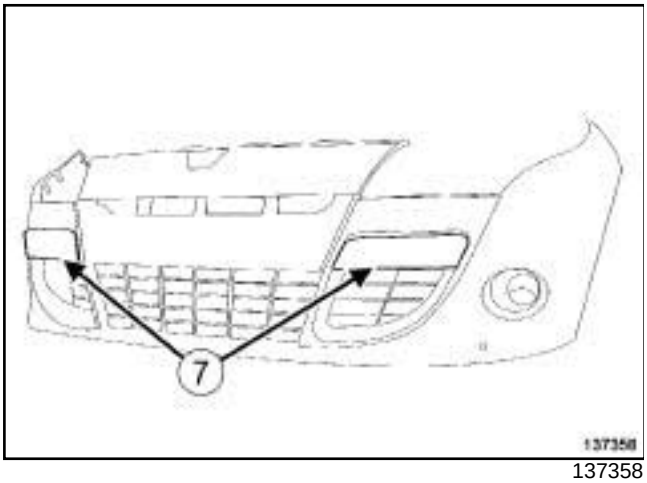

137358

❏ Unclip the front bumper impact strips (**7**) .

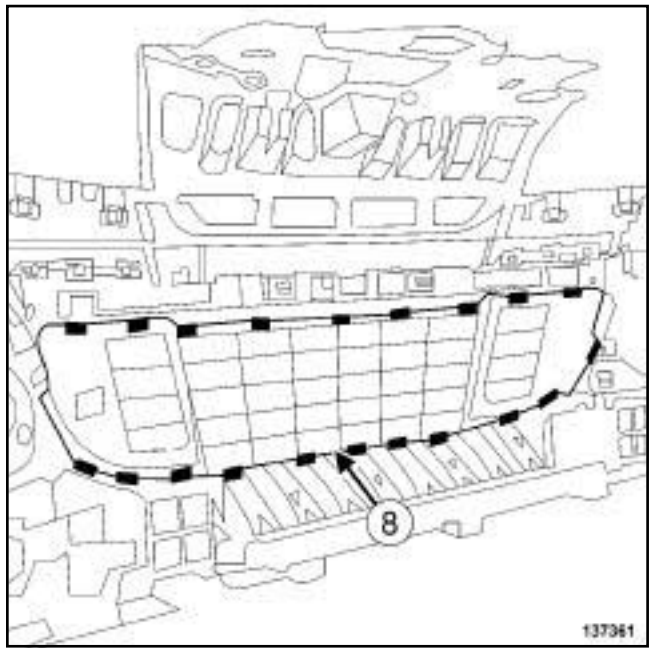

137361

❏ Unclip the centre grille (**8**) .

D95

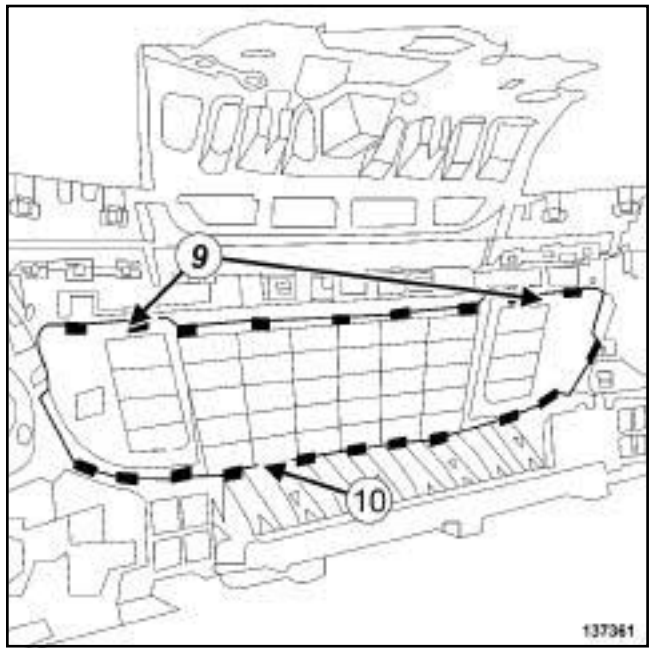

137361

❏ Drill out the rivets (**9**) .

❏ Unclip the centre grille (**10**) .

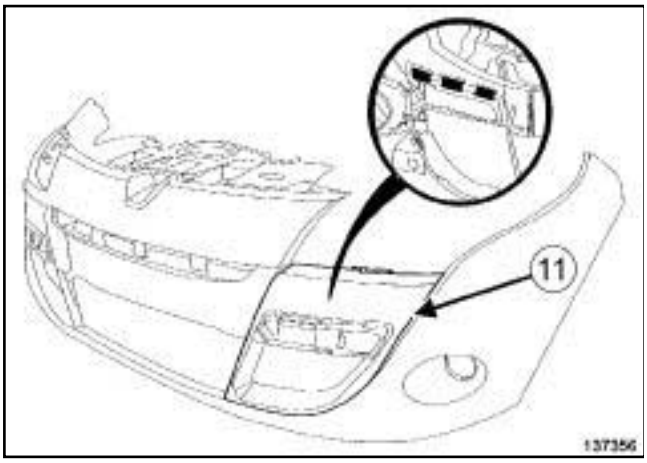

137356

❏ Unclip the trims (**11**) .

J95

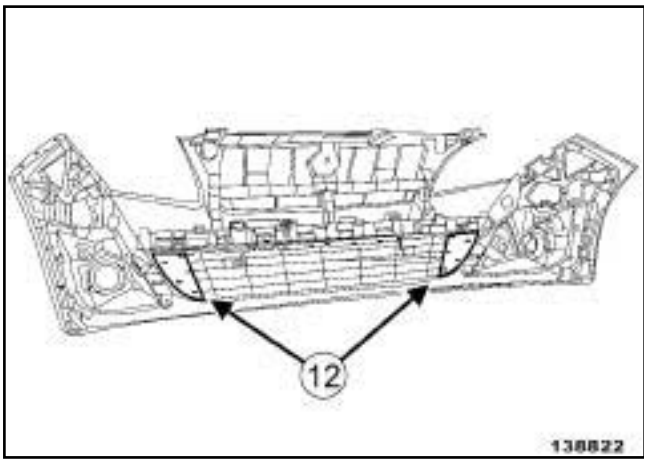

138822

❏ Unclip the centre grille blanking covers (**12**) .

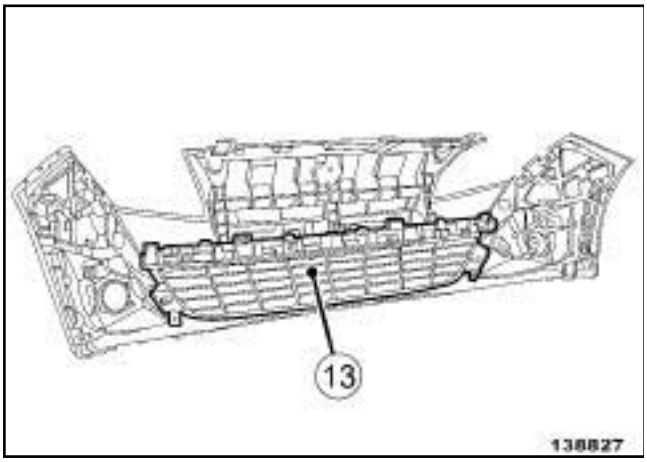

138827

❏ Unclip the centre grille (**13**) .

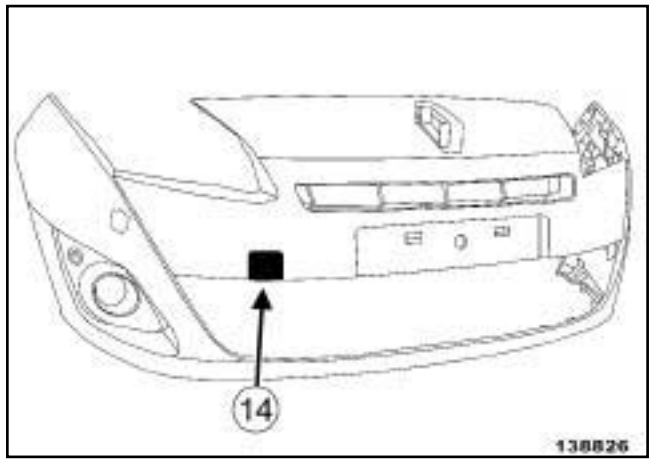

138826

❏ Unclip the tow eye flap.

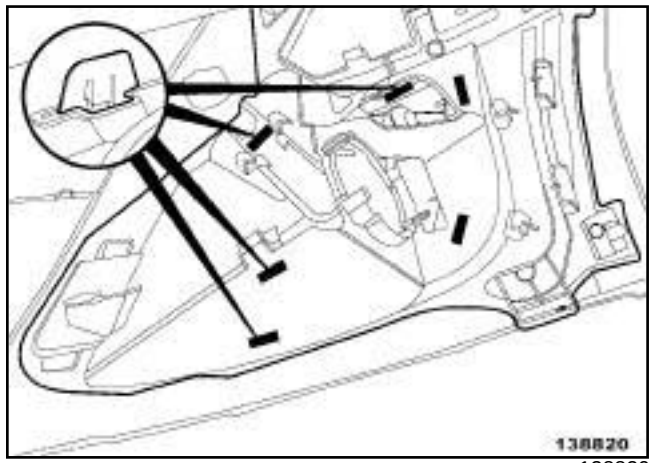

138820

❏ Unclip the fog light mounting trim.

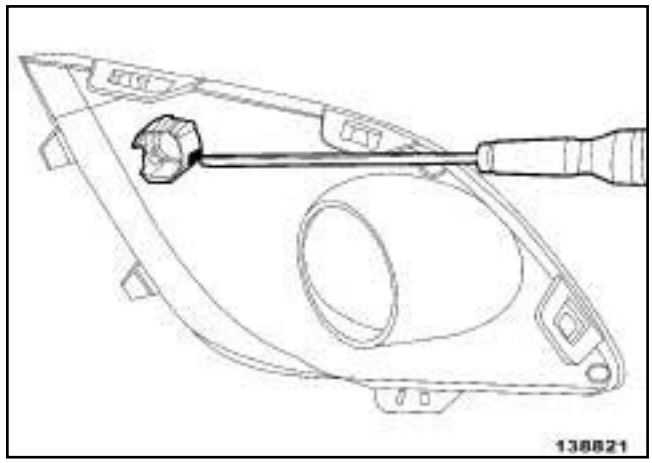

138821

❏ Remove the proximity radar supports.

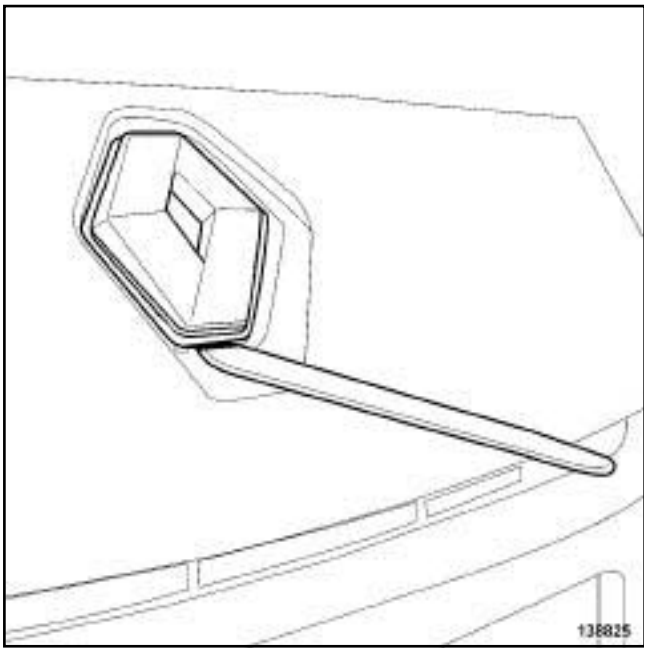

138825

❑ Remove the badge using tool **(Car. 1363)**.

REASSEMBLING

I - REBUILDING PREPARATION OPERATION

❑ **parts always to be replaced: front bumper rivet (50,05,02,18)**.

❑ **parts always to be replaced: Front bumper clip (50,05,02,17)**.

II - REBUILDING OPERATION FOR PART CONCERNED

❑ Refit the badge.

J95

❑ Refit:

- the proximity radar mountings.
- the fog light mounting trim,
- the tow eye flap,
- the centre grille,
- the centre grille blanking covers.

D95

❑ Clip on:

- the trims ***(11)*** ,
- the central grille ***(10)*** .

❑ Refit new rivets.

B95 or K95

❑ Clip on:

- the centre grille ***(8)*** ,
- the front bumper impact strips ***(7)*** .

❑ Clip the aerodynamic component ***(6)*** .

❑ Refit new clips ***(5)*** .

❑ Clip on the diffuser ***(4)*** .

❑ Refit new rivets.

FOG LIGHT, and FR AND RR PROX RADAR

❑ Refit the front bumper wiring (see **Front bumper wiring: Removal - Refitting**) (88A, Wiring).

FR AND RR PROX RADAR

❑ Refit the proximity radars (see **Proximity radar Removal - Refitting**) (87F, Parking distance control).

HEADLIGHT WASHERS WITH BLADE

❑ Refit the headlight washer jets (see **Headlight washer jet: Removal - Refitting**) (85A, Wiping - Washing).

❑ Refit:

- the trims ***(2)*** ,
- the bolts ***(1)*** .

FOG LIGHT

❑ Refit the front fog lights (see **Front fog light: Removal - Refitting**) (80B, Headlights).

III - FINAL OPERATION

❑ Refit:

- the front bumper (see **55A**, **Exterior protection**, **Front bumper: Removal - Refitting**, page **55A-1**) ,
- the front section of the wheel arch liners (see **55A**, **Exterior protection**, **Front wheel arch liner: Removal - Refitting**, page **55A-24**) ,
- the front wheels (see **Wheel: Removal - Refitting**) (35A, Wheels and tyres).

HEADLIGHT WASHERS WITH BLADE

❑

Note:

When a front bumper is replaced, the replacement part needs to be modified before it is painted so that the headlight washer jets can be fitted.

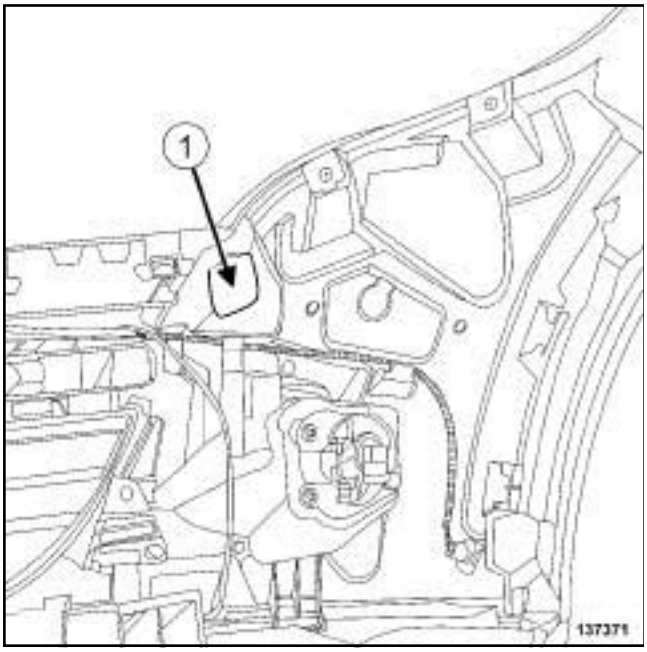

137371

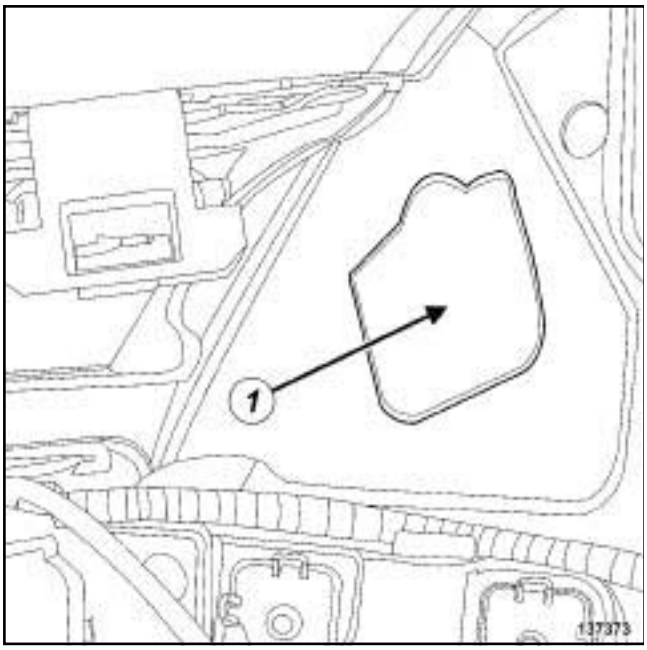

137373

❑ Drill the front bumper according to the marking (**1**) using the cutting kit or a conical cutter.

❑ Finish off using a small file.

Essential special tooling	
Car. 1363	Set of trim removal levers.

REMOVAL

I - REMOVAL PREPARATION OPERATION

❑ Position the vehicle on a two-post lift (see **Vehicle: Towing and lifting**) (02A, Lifting equipment).

❑ Remove:

- the luggage compartment seal (partially),
- the rear wheels (see **Wheel: Removal - Refitting**) (35A, Wheels and tyres),
- the rear wheel arch liners (see **55A**, **Exterior protection**, **Rear wheel arch liner: Removal - Refitting**, page **55A-27**) ,
- the rear wing lights (see **Rear light on wing: Removal - Refitting**) (81A, Rear lighting).

B95 or D95

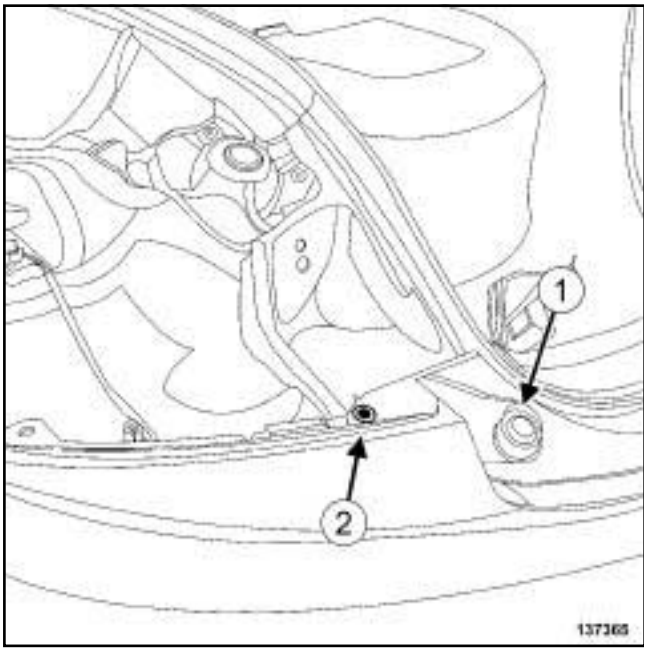

137365

❑ Remove:

- the stops (**1**) ,
- the clips (**2**) .

K95

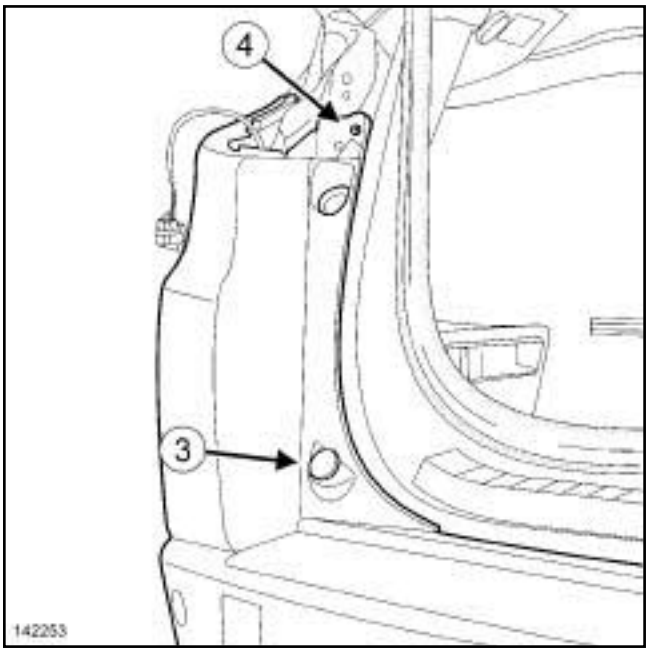

142253

❑ Remove:

- the stops (**3**) ,
- the bolts (**4**) .

II - OPERATION FOR REMOVAL OF PART CONCERNED

B95 or D95 or K95

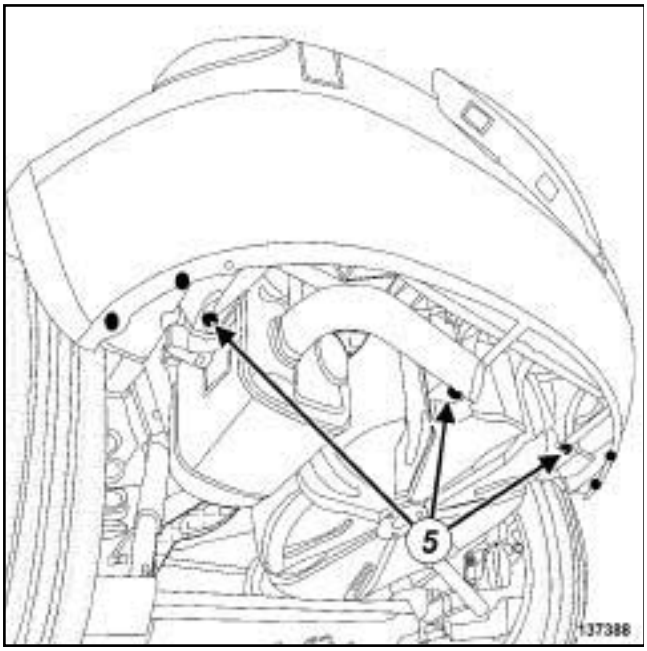

137388

❑ Remove the bolts (**5**) .

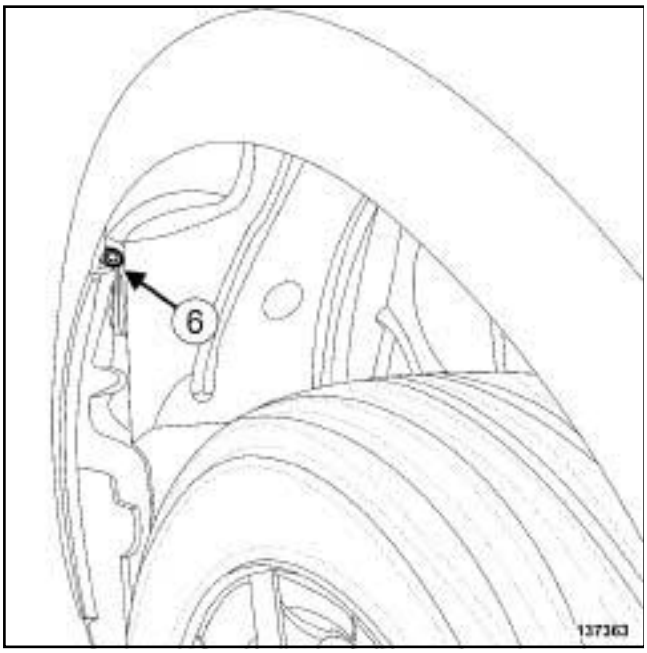

137363

❑ Remove the bolts (**6**) .

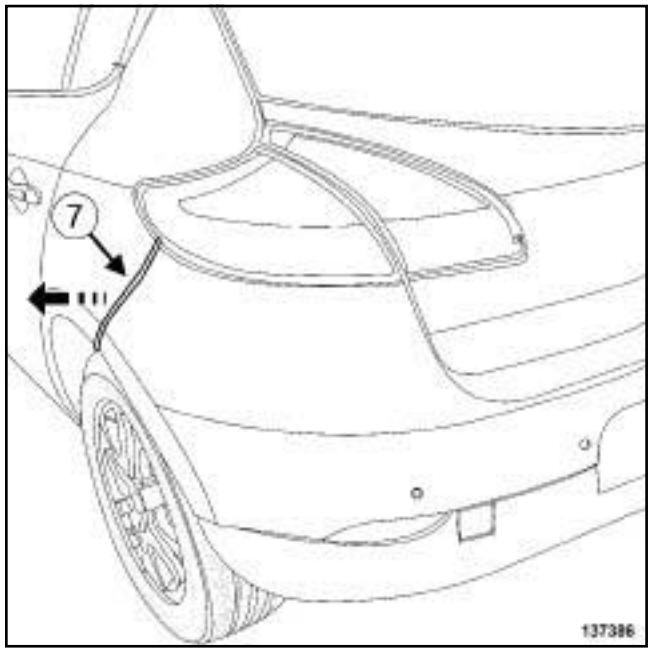

137386

❑ Unclip the rear bumper at (**7**) .

❑ Partially remove the rear bumper (this operation requires two people).

❑ Disconnect the rear bumper wiring connector.

❑ Unclip the rear bumper wiring connector.

❑ Remove the rear bumper (this operation requires two people).

J95

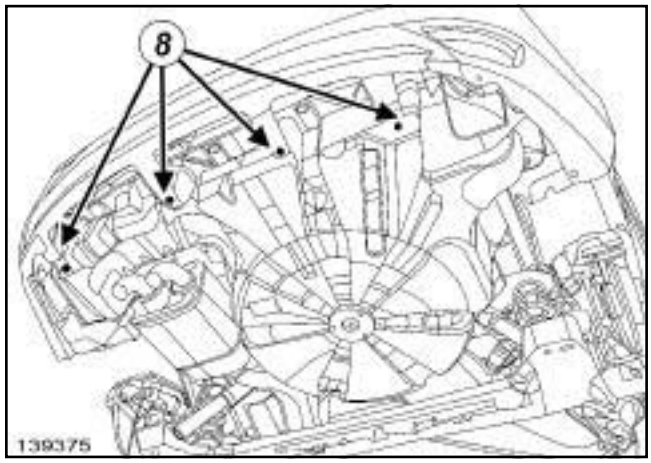

139375

❑ Remove the bolts (**8**) .

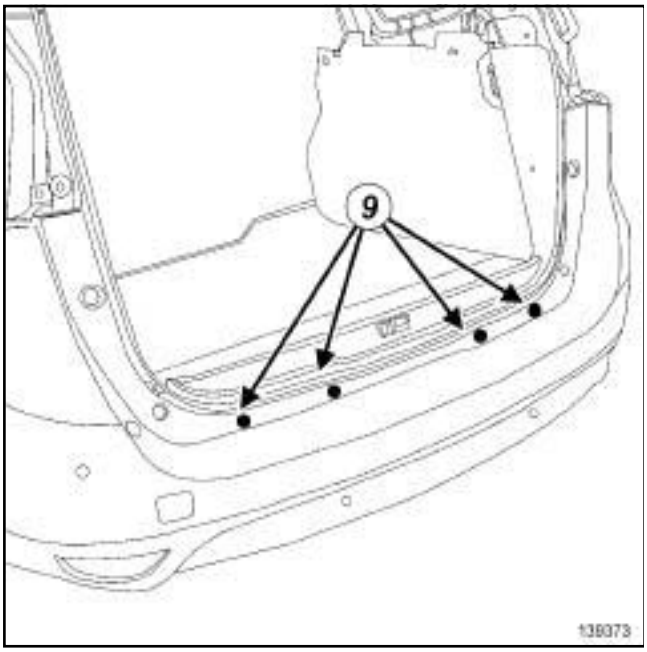

139373

❏ Remove the bolts (**9**) .

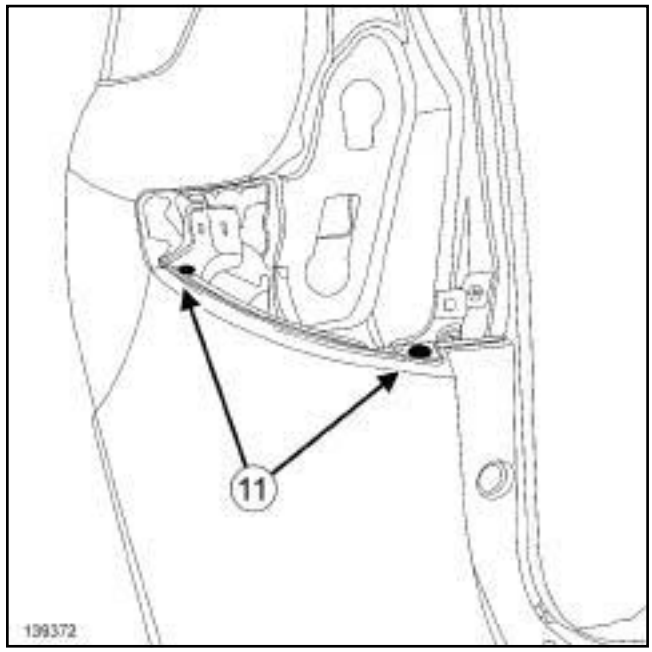

139372

❏ Remove the clips (**11**) .

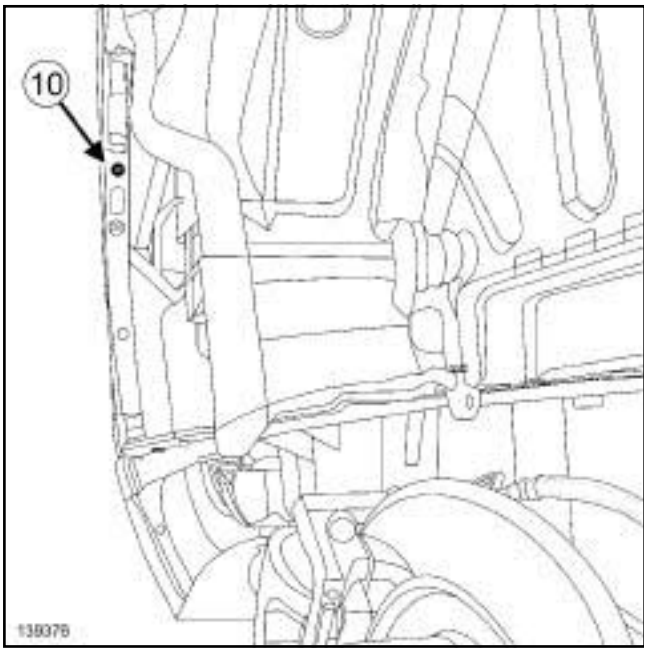

139376

❏ Remove the bolts (**10**) .

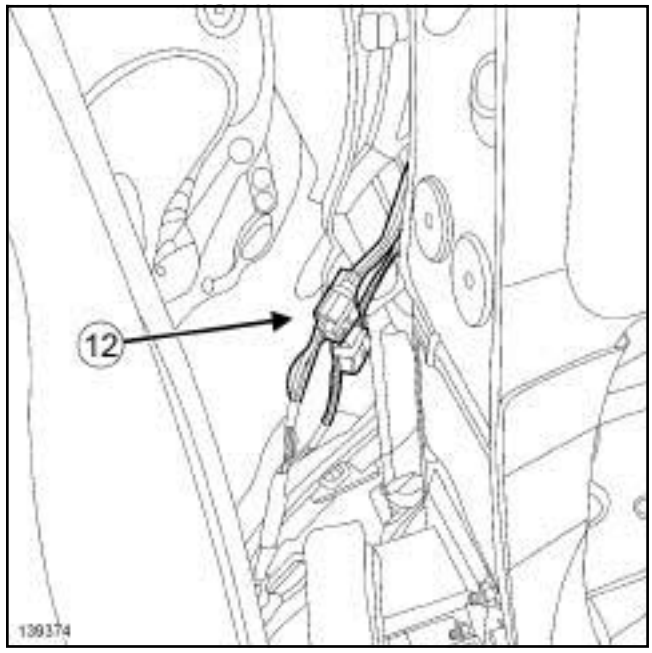

139374

❏ Disconnect the connector (**12**) .

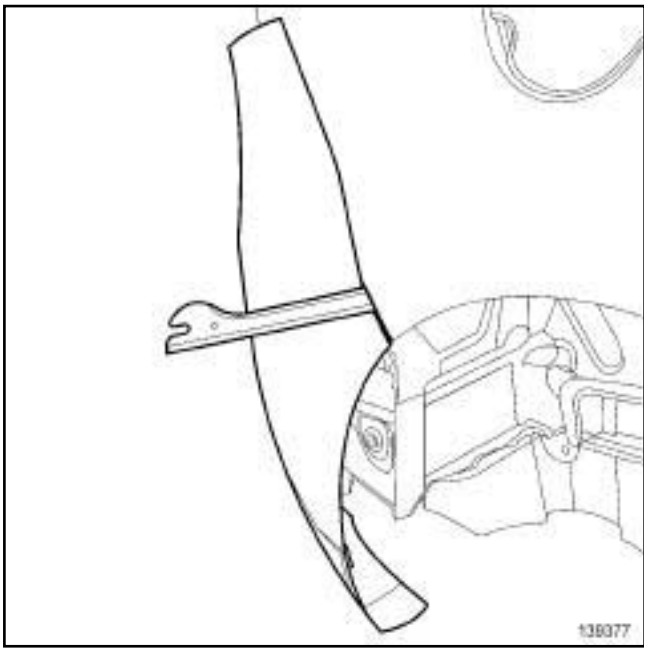

139377

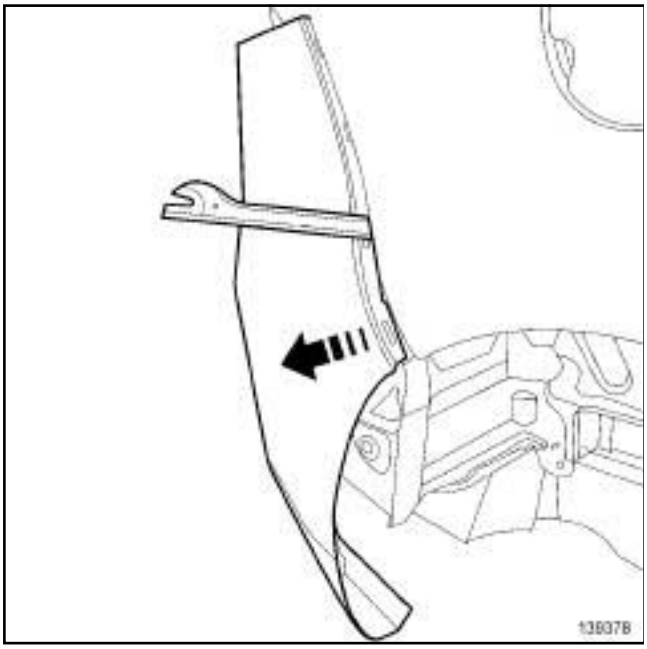

139378

❏ Unclip the rear bumper using the tool **(Car. 1363)**.

❏ Remove the rear bumper (this operation requires two people).

REFITTING

I - REFITTING OPERATION FOR PART CONCERNED

❏ Connect the rear bumper wiring connector.

❏ Refit the rear bumper (this operation requires two people).

II - FINAL OPERATION

B95 or D95 or K95

❏ Refit the stops.

❏ Refit:

- the rear wing lights (see **Rear light on wing: Removal - Refitting**) (81A, Rear lighting),
- the rear wheel arch liners (see **55A**, **Exterior protection**, **Rear wheel arch liner: Removal - Refitting**, page **55A-27**) ,
- the rear wheels (see **Wheel: Removal - Refitting**) (35A, Wheels and tyres),
- the luggage compartment seal.

❏ Carry out a function test.

STRIPPING

I - STRIPPING PREPARATION OPERATION

❑ Position the vehicle on a two-post lift (see **Vehicle: Towing and lifting**) (02A, Lifting equipment).

❑ Remove:

- the rear wheels (see **Wheel: Removal - Refitting**) (35A, Wheels and tyres),
- the rear wheel arch liners (see **55A**, **Exterior protection**, **Rear wheel arch liner: Removal - Refitting**, page **55A-27**) ,
- the rear wing lights (see **Rear light on wing: Removal - Refitting**) (81A, Rear lighting),
- the rear bumper (see **55A**, **Exterior protection**, **Rear bumper: Removal - Refitting**, page **55A-12**) .

II - STRIPPING OPERATION FOR PART CONCERNED

❑ Remove the rear bumper wiring (see **Rear bumper wiring: Removal - Refitting**) (88A, Wiring).

B95 or D95

❑ Remove the number plate lights (see **Number plate light: Removal - Refitting**) (81A, Rear lighting).

J95, and DOOR OPEN SYST. 433 NML

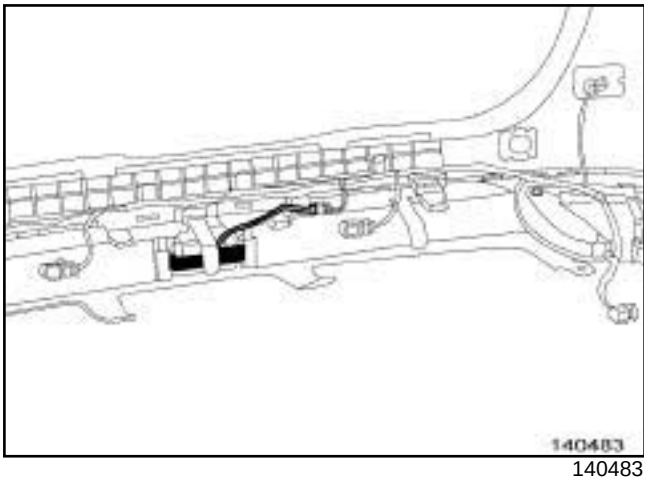

140483

❑ Remove the non-side opening element opening aerial.

FR AND RR PROX RADAR or REAR PROX RADAR

❑ Remove the proximity radars (see **Proximity radar Removal - Refitting**) (87F, Parking distance control).

D95

❑ Remove the rear fog lights (see **Rear fog lights: Removal - Refitting**) (81A, Rear lighting).

J95

❑ Remove the rear fog light and the reversing light (see **Rear fog lights: Removal - Refitting**) (81A, Rear lighting).

B95 or K95

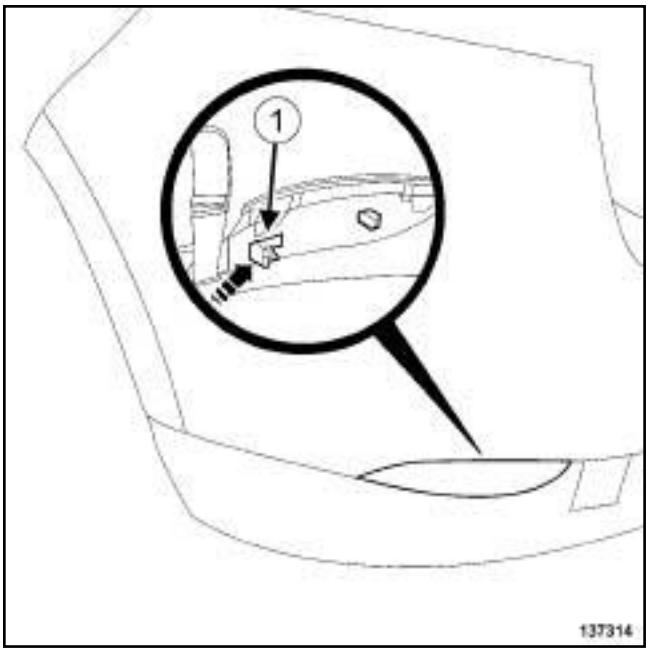

137314

❑ Unclip the reflectors at (**1**) .

❑ Remove the reflectors.

J95

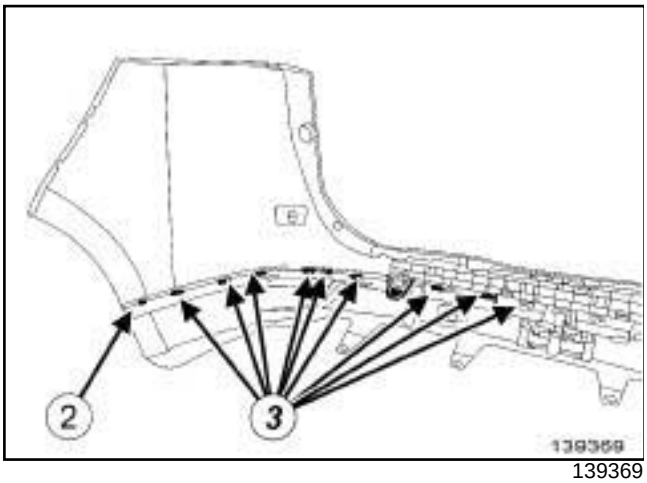

139369

❑ Remove clip (**2**) .

❑ Unclip the lower section of the rear bumper at (**3**) .

REASSEMBLING

I - REBUILDING PREPARATION OPERATION

❑ **parts always to be replaced: Rear bumper clip (50,05,04,13)**.

II - REBUILDING OPERATION FOR PART CONCERNED

J95

❑ Clip the lower section of the rear bumper.

B95 or K95

❑ Refit the reflectors ***(1)*** .

D95

❑ Refit the rear fog lights (see **Rear fog lights: Removal - Refitting**) (81A, Rear lighting).

J95

❑ Refit the fog light and the reversing light (see **Rear fog lights: Removal - Refitting**) (81A, Rear lighting).

FR AND RR PROX RADAR or REAR PROX RADAR

❑ Refit the proximity radars (see **Proximity radar Removal - Refitting**) (87F, Parking distance control).

J95, and DOOR OPEN SYST. 433 NML

❑ Refit the non-side opening element opening aerial.

B95 or D95

❑ Refit the number plate lights (see **Number plate light: Removal - Refitting**) (81A, Rear lighting).

❑ Refit the rear bumper wiring (see **Rear bumper wiring: Removal - Refitting**) (88A, Wiring).

III - FINAL OPERATION

❑ Refit:

- the rear bumper (see **55A**, **Exterior protection**, **Rear bumper: Removal - Refitting**, page **55A-12**) ,
- the rear wing lights (see **Rear light on wing: Removal - Refitting**) (81A, Rear lighting),
- the rear wheel arch liners (see **55A**, **Exterior protection**, **Rear wheel arch liner: Removal - Refitting**, page **55A-27**) ,
- the rear wheels (see **Wheel: Removal - Refitting**) (35A, Wheels and tyres).

J95 or K95

REMOVAL

I - REMOVAL PREPARATION OPERATION

❑ Remove the tailgate trim (see **Tailgate lining: Removal - Refitting**) (73A, Non-side opening elements trim).

J95

❑ Disconnect:

- the registration plate light connectors.
- the tailgate opening switch connector.

PROXIMITY RADAR 0

❑ Remove the reversing camera (see **Reversing camera: Removal - Refitting**) (87F, Parking distance control).

K95

❑ Unclip the connector of the tailgate strip.

❑ Disconnect the connector of the tailgate strip.

II - OPERATION FOR REMOVAL OF PART CONCERNED

J95

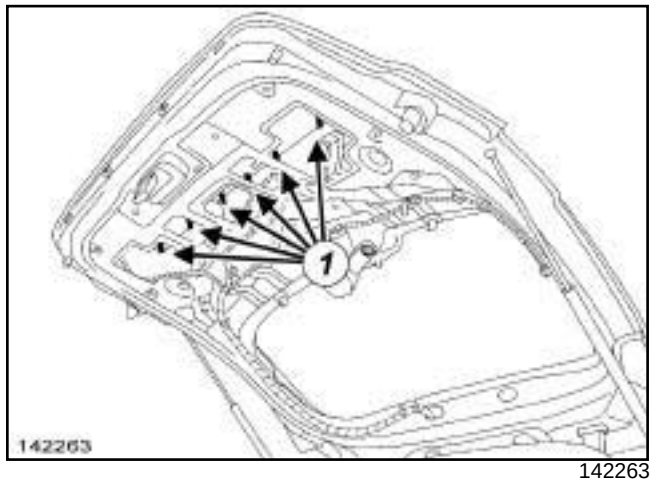

142263

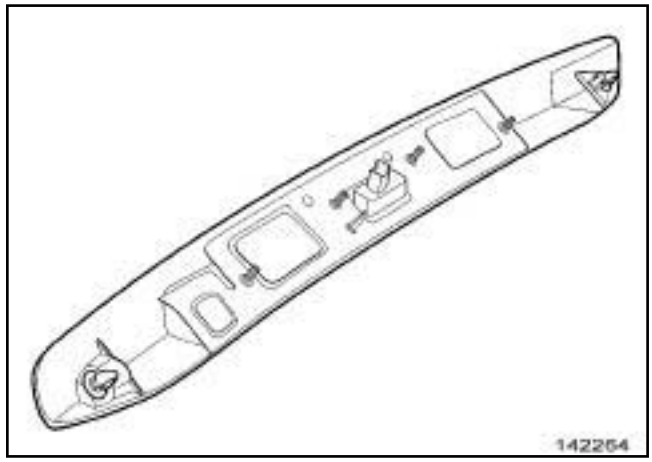

142264

❑ Remove the nuts (**1**) from the tailgate strip.

❑ Unclip the tailgate strip.

❑ Remove the tailgate strip.

J95 or K95

K95

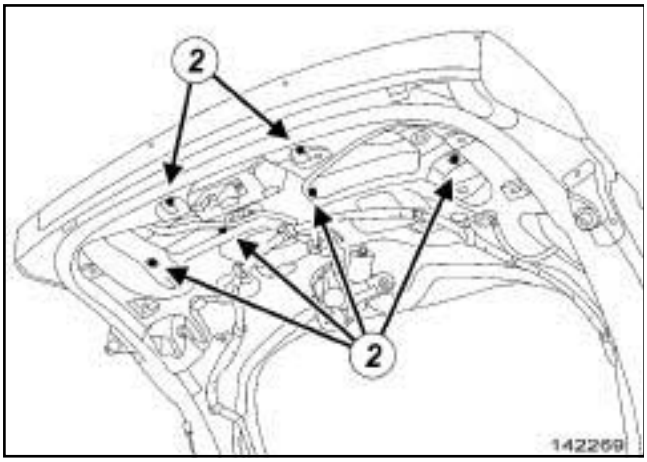

142269

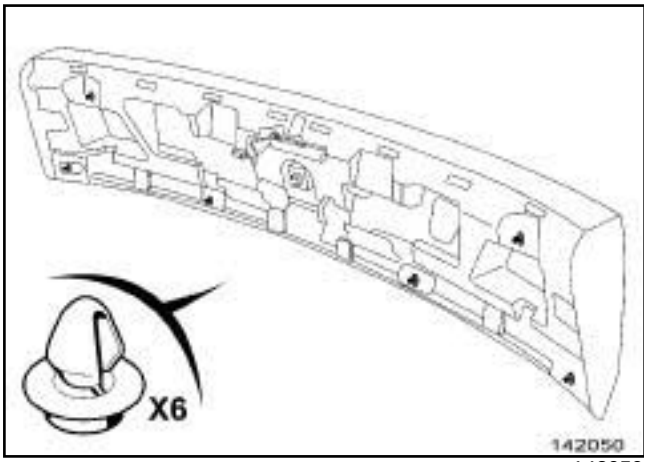

142050

- Remove the bolts (**2**) from the tailgate strip.
- Unclip the tailgate strip.
- Partially remove the tailgate strip.
- Remove:
  - the seal of the connector for the tailgate strip,
  - the tailgate strip

REFITTING

I - REFITTING PREPARATION OPERATION

- **parts always to be replaced: Sealing foam of rear opening element strip (50,05,06,17)**.

II - REFITTING OPERATION FOR PART CONCERNED

- Refit the tailgate strip.

K95

- Refit the seal of the connector for the tailgate strip.

III - FINAL OPERATION

J95

- Connect:
  - the tailgate opening switch connector,
  - the registration plate light connectors.

PROXIMITY RADAR 0

- Refit the reversing camera (see **Reversing camera: Removal - Refitting**) (87F, Parking distance control).

K95

- Connect the connector of the tailgate strip.
- Clip on the connector of the tailgate strip.

- Refit the tailgate trim (see **Tailgate lining: Removal - Refitting**) (73A, Non-side opening elements trim).

REMOVAL

I - REMOVAL PREPARATION OPERATION

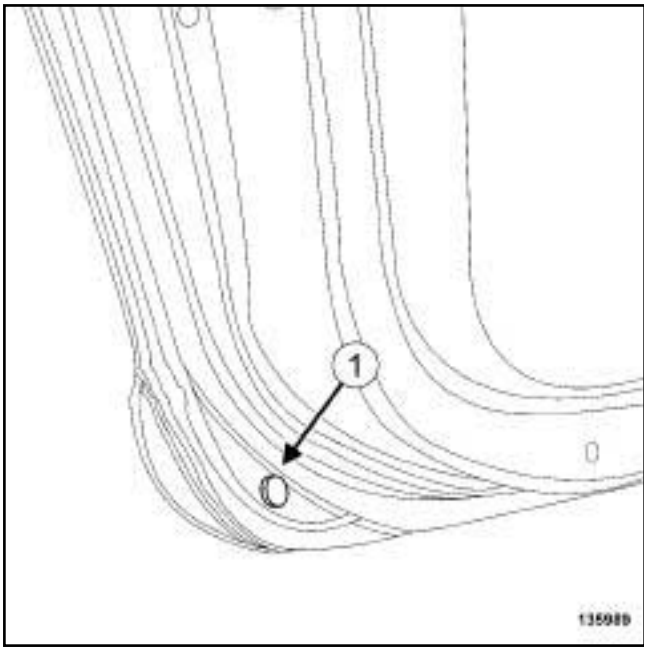

135984

❑ Remove:

- the blanking cover (**1**) ,
- the bolt.

II - OPERATION FOR REMOVAL OF PART CONCERNED

B95 or K95

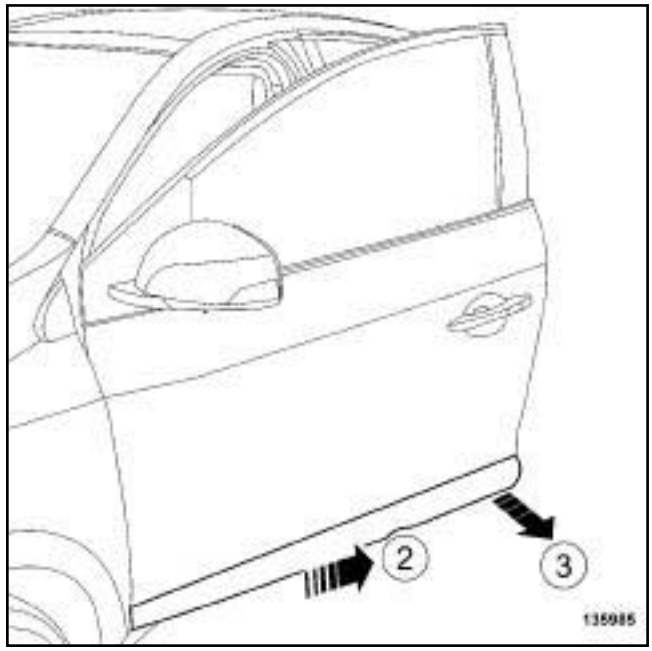

135985

❑ Remove the front side door protective strip at (**2**) then at (**3**) .

D95

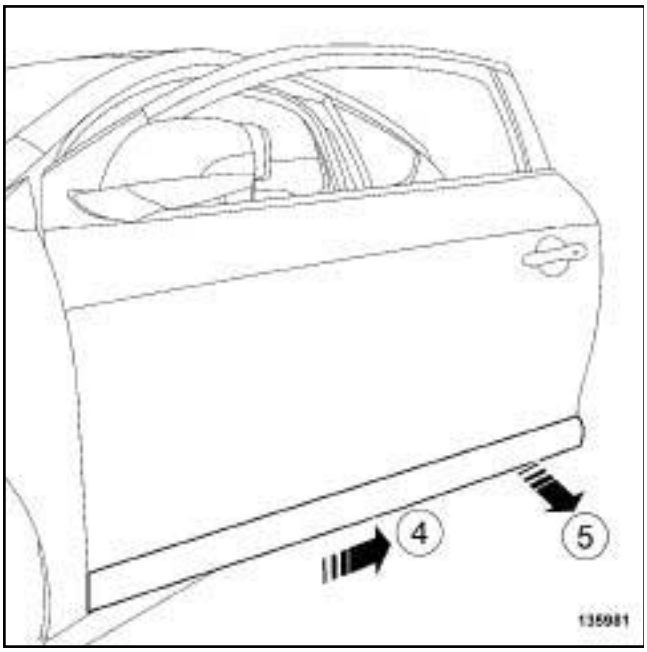

135981

❑ Remove the front side door protective strip at (**4**) then at (**5**) .

J95

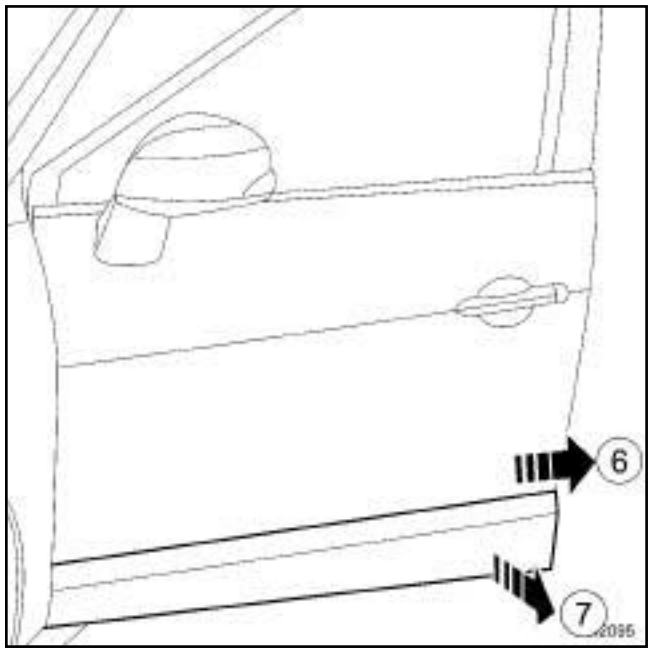

142095

❑ Remove the front side door protective strip at (**6**) then at (**7**) .

REFITTING

REFITTING OPERATION FOR PART CONCERNED

❑ Refit the front side door protective strip.

B95 or J95 or K95

REMOVAL

OPERATION FOR REMOVAL OF PART CONCERNED

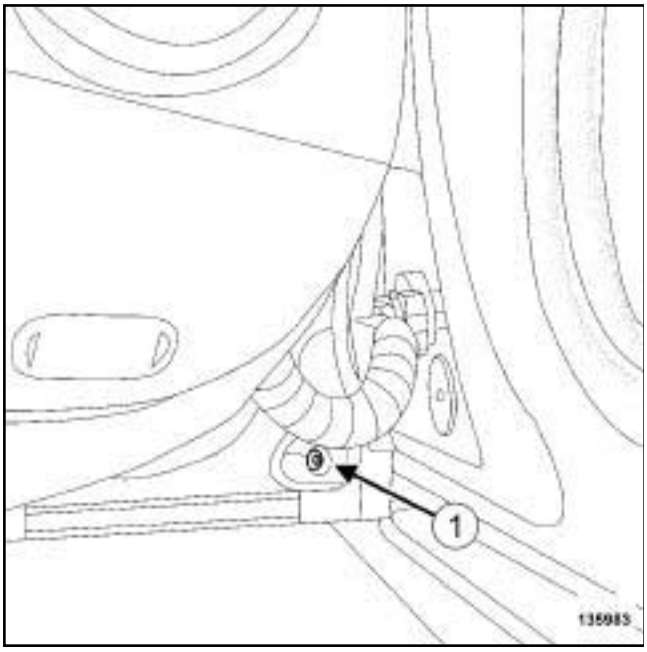

135983

❑ Remove the bolt (**1**) .

B95 or K95

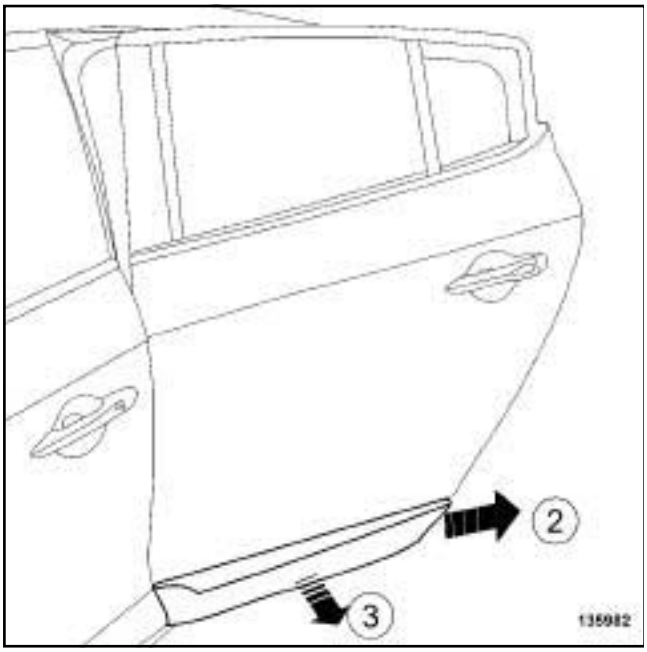

135982

❑ Remove the rear side door protective strip at (**2**) then at (**3**) .

J95

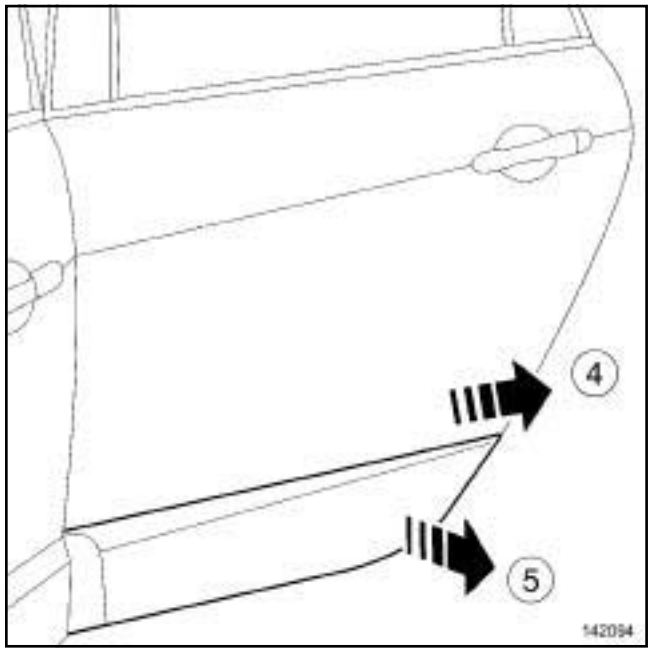

142094

❑ Remove the rear side door protective strip at (**4**) then at (**5**) .

REFITTING

REFITTING OPERATION FOR PART CONCERNED

❑ Refit the rear side door moulding at.

D95

Essential special tooling	
Car. 1363	Set of trim removal levers.

REMOVAL

OPERATION FOR REMOVAL OF PART CONCERNED

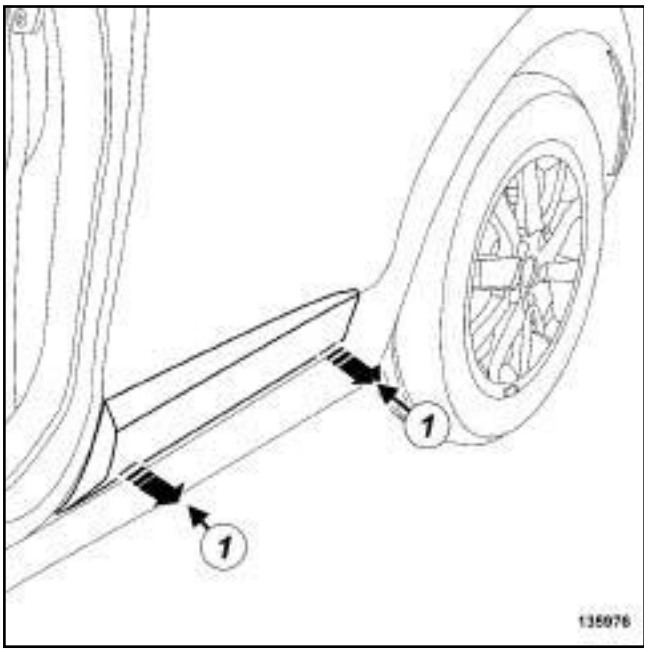

135976

❑ Remove the rear wing protective strip at (**1**) using the tool **(Car. 1363)**.

REFITTING

I - REFITTING PREPARATION OPERATION

❑ Check the condition of the clips and replace them if necessary.

II - REFITTING OPERATION FOR PART CONCERNED

❑ Refit the rear wing protective strip.

REMOVAL

I - REMOVAL PREPARATION OPERATION

❑ Position the vehicle on a two-post lift (see **Vehicle: Towing and lifting**) (02A, Lifting equipment).

❑ Remove the front wheel (see **Wheel: Removal - Refitting**) (35A, Wheels and tyres).

II - OPERATION FOR REMOVAL OF PART CONCERNED

1 - Front wheel arch liner, front section

B95 or D95

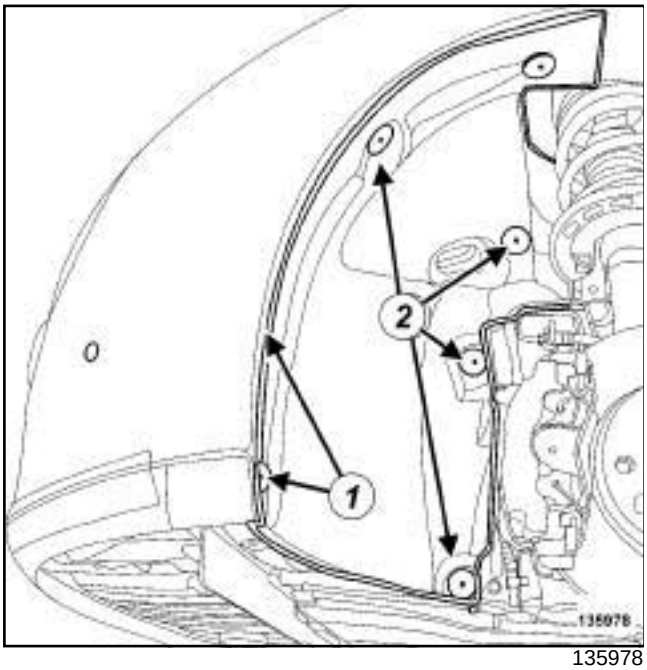

135978

❑ Remove:

- the bolts (**1**) ,
- the clips (**2**) ,
- front wheel arch liner, front section.

J95

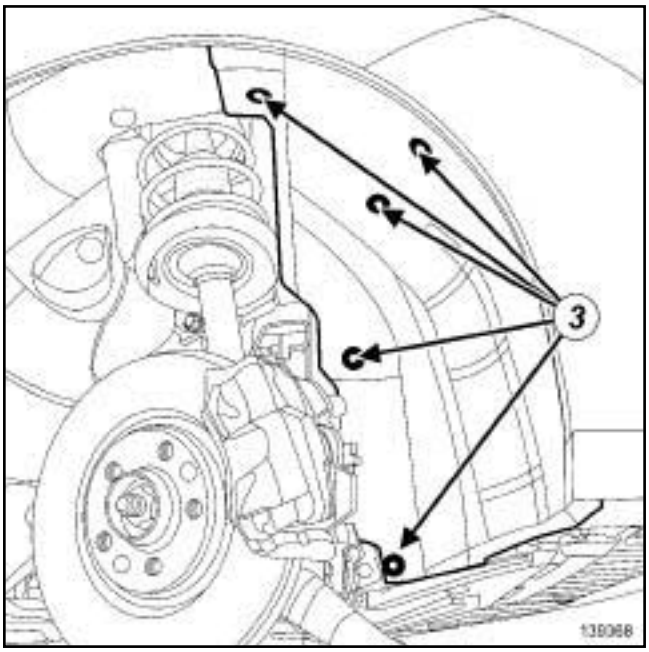

139368

❑ Remove the clips (**3**) .

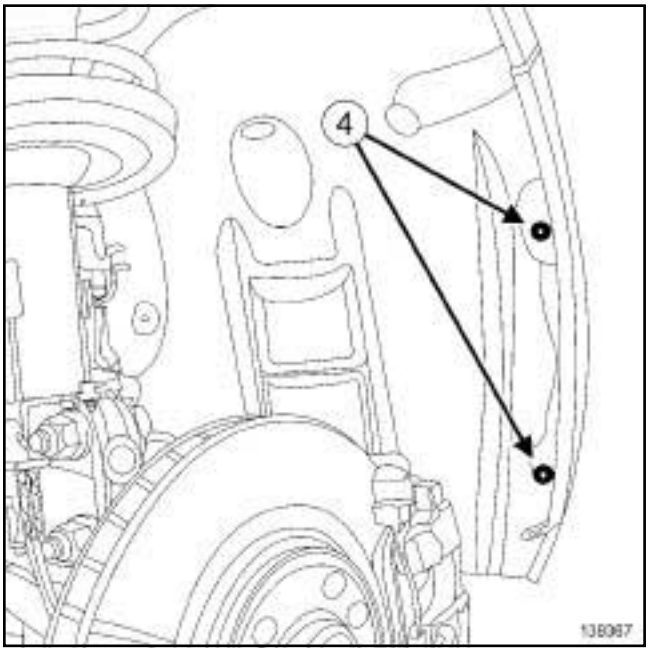

139367

❑ Remove:

- the bolts (**4**) ,
- front wheel arch liner, front section.

2 - Front wheel arch liner, rear section

B95 or D95

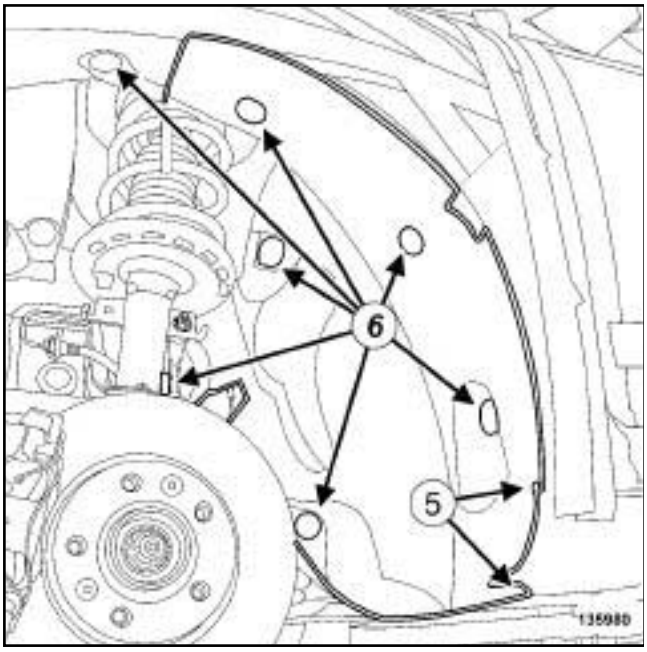

135980

❑ Remove:

- the bolts (**5**) ,
- the clips (**6**) ,
- front wheel arch liner, rear section.

J95

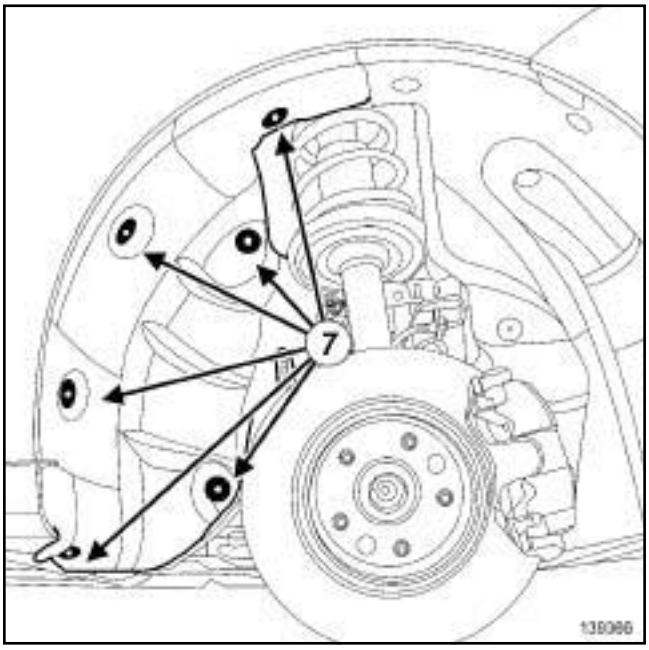

139366

❑ Remove:

- the clips (**7**) ,
- front wheel arch liner, rear section.

REFITTING

I - REFITTING PREPARATION OPERATION

❑ Check the condition of the clipsand replace them if necessary.

II - REFITTING OPERATION FOR PART CONCERNED

1 - Front wheel arch liner, rear section

B95 or D95

❑ Refit:

- the front wheel arch liner, rear section,
- the clips ***(6)*** ,
- the bolts ***(5)*** .

J95

❑ Refit:

- the front wheel arch liner, rear section,
- the clips ***(7)*** .

2 - Front wheel arch liner, front section

B95 or D95

❑ Refit:

- the front wheel arch liner, front section,
- the clips ***(2)*** ,
- the bolts ***(1)*** .

J95

❑ Refit:

- the front wheel arch liner, front section,
- the clips ***(3)*** ,
- the bolts ***(4)*** .

III - FINAL OPERATION

❑ Refit the front wheel (see **Wheel: Removal - Refitting**) (35A, Wheels and tyres).

REMOVAL

I - REMOVAL PREPARATION OPERATION

❑ Position the vehicle on a two-post lift (see **Vehicle: Towing and lifting**) (02A, Lifting equipment).

❑ Remove the rear wheel (see **Wheel: Removal - Refitting**) (35A, Wheels and tyres).

II - OPERATION FOR REMOVAL OF PART CONCERNED

B95 or D95

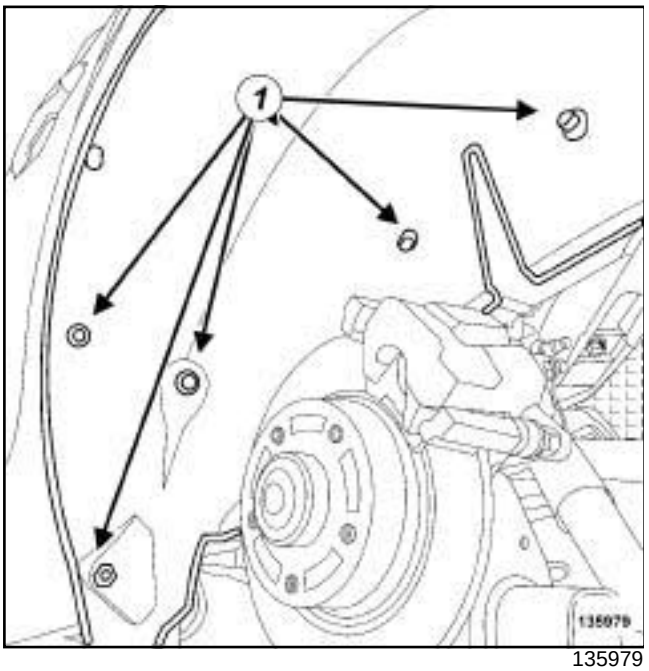

135979

❑ Remove the plastic nuts (**1**) .

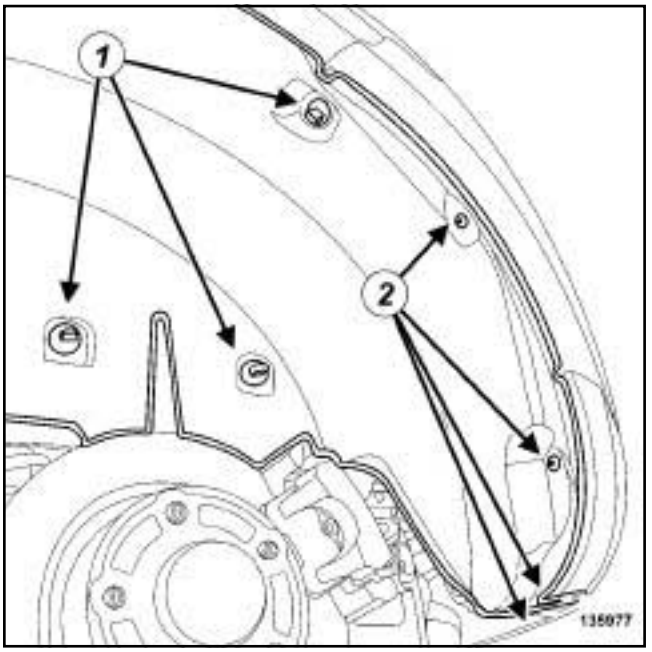

135977

❑ Remove:

- the plastic nuts ***(1)*** ,
- the bolts (**2**) ,
- the rear wheel arch liner.

J95

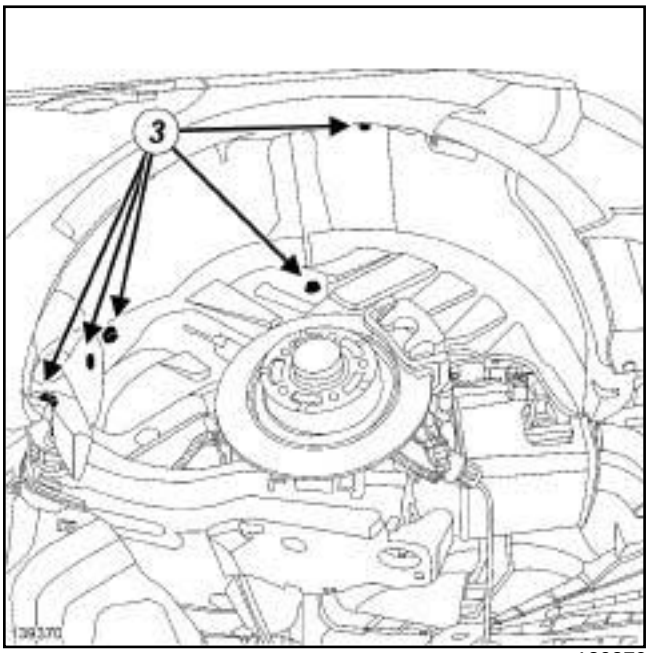

139370

❑ Remove the plastic nuts (**3**) .

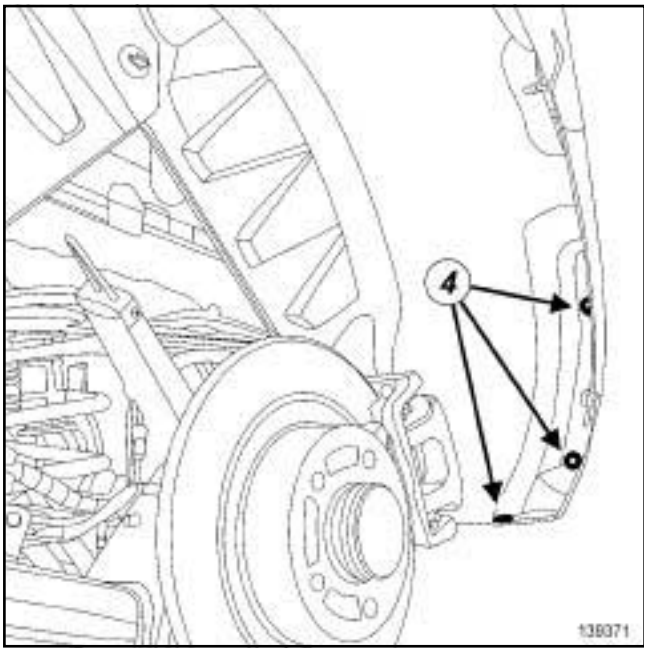

139371

❑ Remove:

- plastic rivets (**4**) ,
- the rear wheel arch liner.

REFITTING

I - REFITTING PREPARATION OPERATION

❑ Check the condition of the plastic nuts and replace them if necessary.

II - REFITTING OPERATION FOR PART CONCERNED

B95 or D95

❑ Refit:

- the rear wheel arch liner,
- the plastic nuts ***(1)*** ,
- the bolts ***(2)*** .

J95

❑ Refit:

- the rear wheel arch liner,
- the plastic nuts ***(3)*** ,
- the plastic rivets ***(4)*** .

III - FINAL OPERATION

❑ Refit the rear wheel (see **Wheel: Removal - Refitting**) (35A, Wheels and tyres).

J95

Essential special tooling	
Car. 1363	Set of trim removal levers.

REMOVAL

I - REMOVAL PREPARATION OPERATION

❑ Remove the scuttle panel grille (see **56A**, **Exterior equipment**, **Scuttle panel grille: Removal - Refitting**, page **56A-1**) .

II - OPERATION FOR REMOVAL OF PART CONCERNED

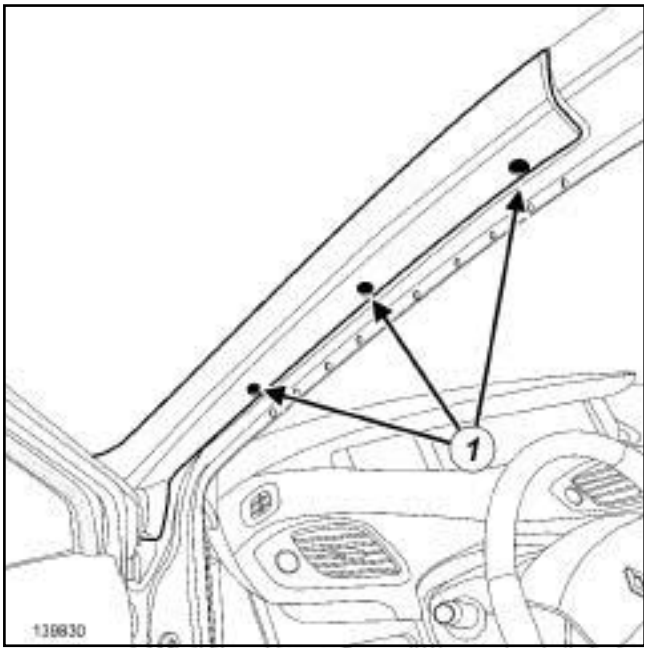

139830

❑ Remove the bolts (**1**) .

❑ Protect the front wing using masking tape.

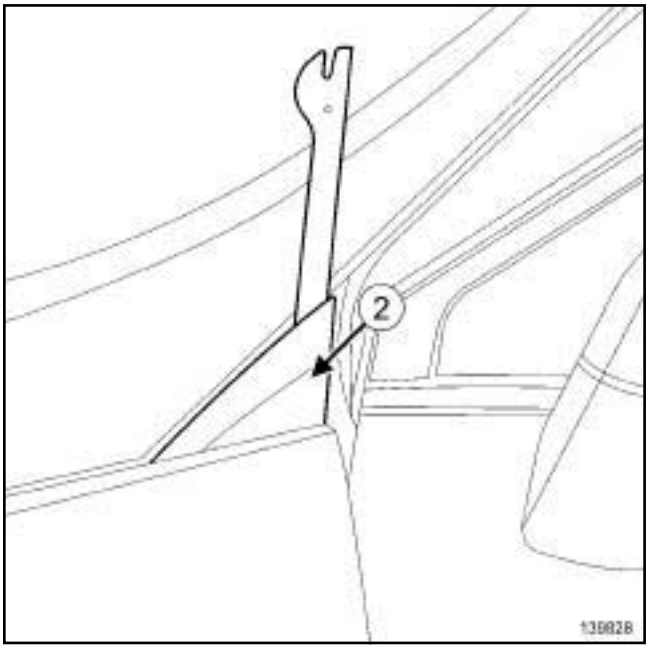

139828

❑ Unclip the trim (**2**) using the tool **(Car. 1363)**.

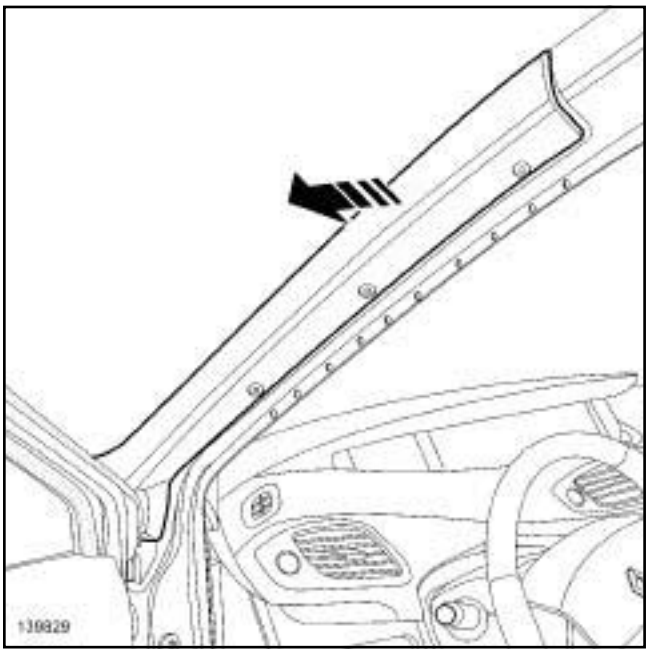

139829

❑ Remove the windscreen pillar trim using the tool **(Car. 1363)**.

REFITTING

I - REFITTING PREPARATION OPERATION

❑ **parts always to be replaced: windscreen pillar trim clip (50,07,04,16)**.

J95

II - REFITTING OPERATION FOR PART CONCERNED

- ❑ Refit the windscreen pillar trim.
- ❑ Clip the trim piece in place ***(2)*** .
- ❑ Refit the bolts ***(1)*** .

III - FINAL OPERATION

- ❑ Refit the scuttle panel grille (see **56A**, **Exterior equipment**, **Scuttle panel grille: Removal - Refitting**, page **56A-1**) .

REMOVAL

I - REMOVAL PREPARATION OPERATION

❑ Remove:

- the door mirror (see **56A**, **Exterior equipment**, **Door mirror: Removal - Refitting**, page **56A-15**) ,
- the front side door exterior weatherstrip (see **Front door side exterior weather strip: Removal - Refitting**) (66A, Window sealing),
- the front side door trim (see **Front side door trim: Removal - Refitting**) (72A, Side opening element trim),
- the door sealing films (see **Door sealing film: Removal - Refitting**) (65A, Opening element sealing),
- the front side door sliding window (see **54A**, **Windows**, **Sliding window in front side door: Removal - Refitting**, page **54A-3**) .

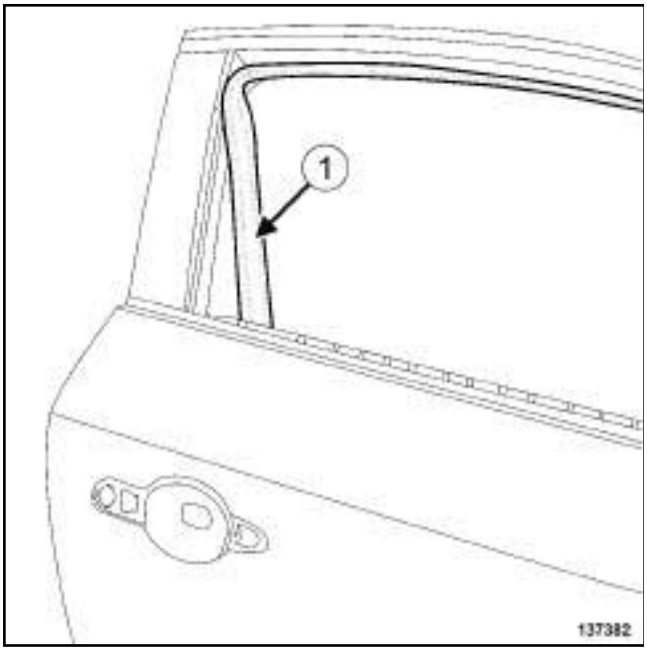

137382

❑ Partially remove the front side door window run channel at (**1**) .

II - OPERATION FOR REMOVAL OF PART CONCERNED

❑

> Note:
>
> When removing the front side door pillar exterior trim, take care not to damage the part. Any damaged parts must be replaced.

B95 or D95

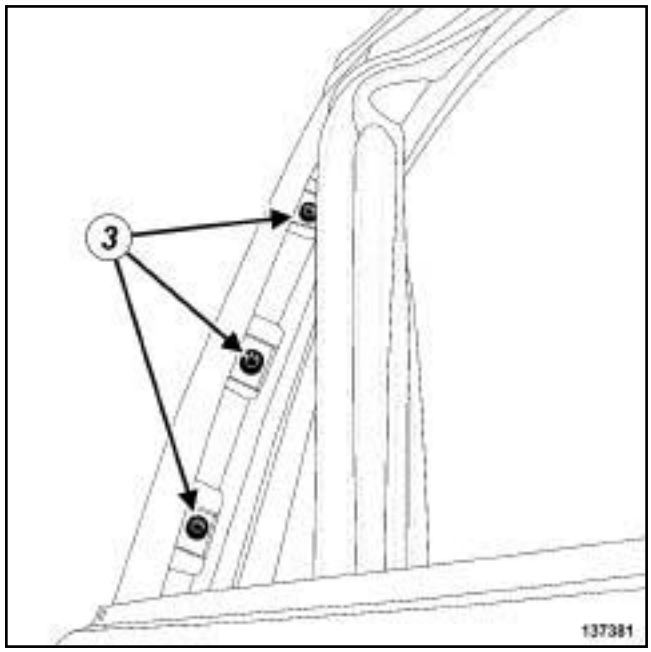

137381

❑ Remove:

- the bolts (**3**) ,
- the front side door pillar exterior trim.

J95

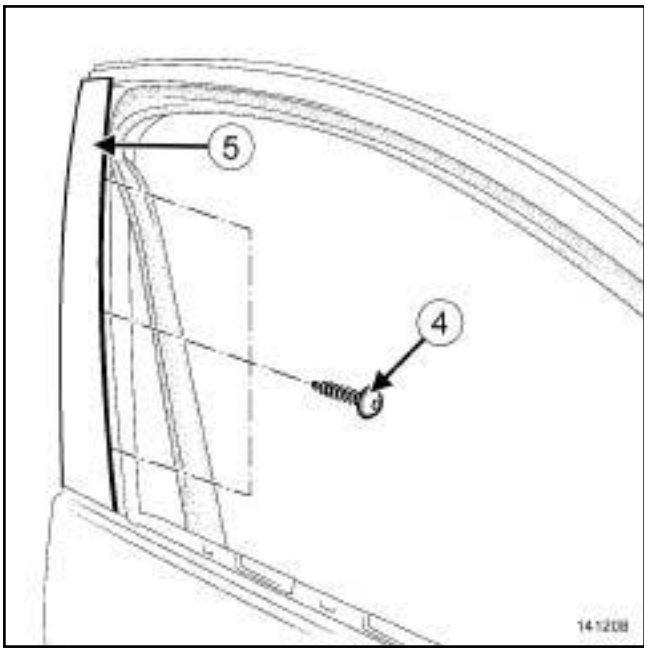

141208

❑ Remove:

- the bolts (**4**) ,
- the front side door pillar exterior trim (**5**) .

REFITTING

I - REFITTING PREPARATION OPERATION

❑ **parts always to be replaced: parts included in the acoustic and fitting foam kit (50,07,04,14)**.

II - REFITTING OPERATION FOR PART CONCERNED

❑ Refit the lower section of the front side door pillar exterior trim.

❑ Fit the upper section of the front side door glass run channel.

❑ Position the front side door pillar exterior trim on the upper section of the window run channel.

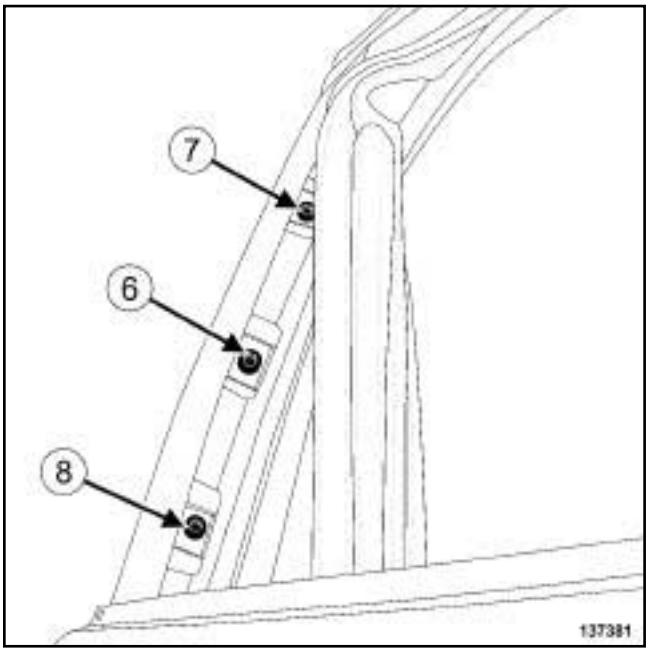

137381

❑ Refit:

- the centre bolt (**6**) while holding the front side door pillar exterior trim in place,
- the upper (**7**) and lower bolts (**8**) .

III - FINAL OPERATION

❑ Refit the front door window run channel.

❑ Check the alignment of the front side door pillar exterior trim with the rear door.

> Note:
>
> If the clearance between the front side door pillar exterior trim and the rear side door is skewed, adhesive shims may be bonded to the front side door pillar exterior trim supports to compensate. This operation requires the removal of the front side door pillar exterior trim.

❏ Refit:

- the front side door sliding window (see **54A**, **Windows**, **Sliding window in front side door: Removal - Refitting**, page **54A-3**) ,
- the door sealing films (see **Door sealing film: Removal - Refitting**) (65A, Opening elements sealing).

❏ Carry out a sealing test (see **Technical Note 0653A**).

❏ Refit:

- the front side door trim (see **Front side door trim: Removal - Refitting**) (72A, Side opening element trim),
- the front side door exterior weatherstrip (see **Front door side exterior weather strip: Removal - Refitting**) (66A, Window sealing),
- the door mirror (see **56A**, **Exterior equipment**, **Door mirror: Removal - Refitting**, page **56A-15**) .

B95 or J95 or K95

REMOVAL

I - REMOVAL PREPARATION OPERATION

❑ Remove:

- the rear side door trim (see **Rear side door trim: Removal - Refitting**) (72A, Side opening element trim),
- the door sealing films (see **Door sealing film: Removal - Refitting**) (65A, Opening elements sealing).

B95 or K95

❑ Remove the rear speaker (see **Rear speakers: Removal - Refitting**) (86A, Radio).

❑ Remove the sliding window from the rear side door (see **54A**, **Windows**, **Sliding window in rear side door: Removal - Refitting**, page **54A-7**) .

J95

❑ Remove the exterior weatherstrip.

1 - Front section of rear side door pillar exterior trim

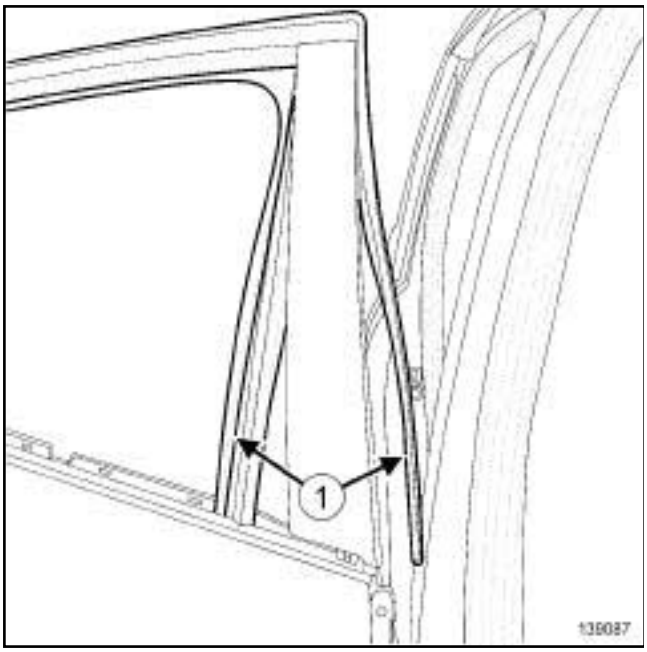

139087

❑ Partially remove the front section of the rear side door window run channel (**1**) .

2 - Rear section of rear side door pillar exterior trim

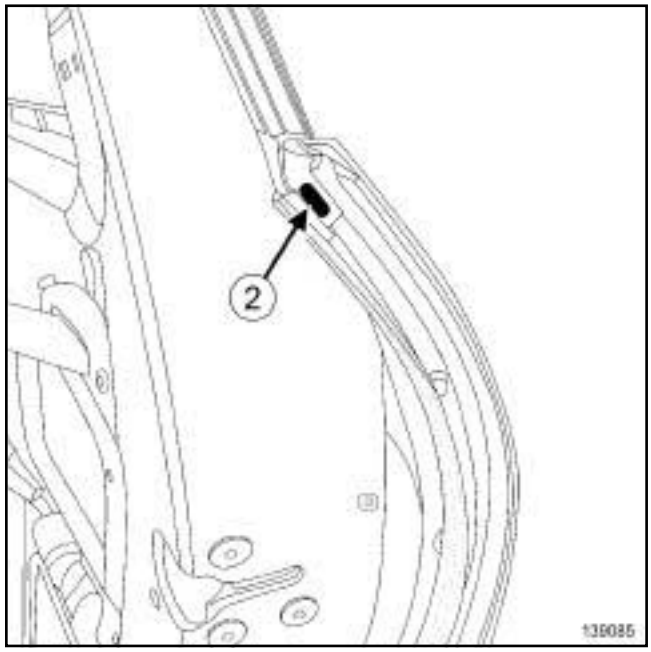

139085

❑ Unfasten clip (**2**) .

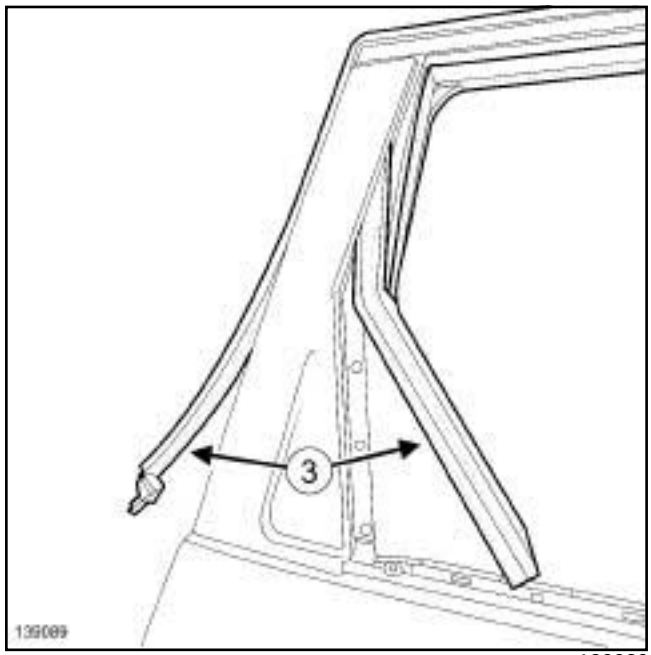

139089

❑ Partially remove the rear section of the rear side door window run channel (**3**) .

B95 or J95 or K95

II - OPERATION FOR REMOVAL OF PART CONCERNED

B95 or K95

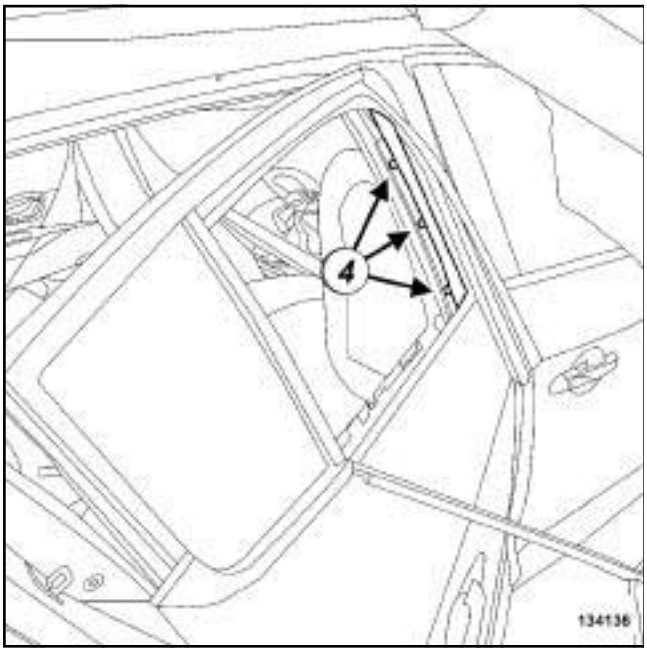

134136

❑ Remove:

- the bolts (**4**) ,
- the rear side door pillar exterior trim.

J95

1 - Front section of rear side door pillar exterior trim

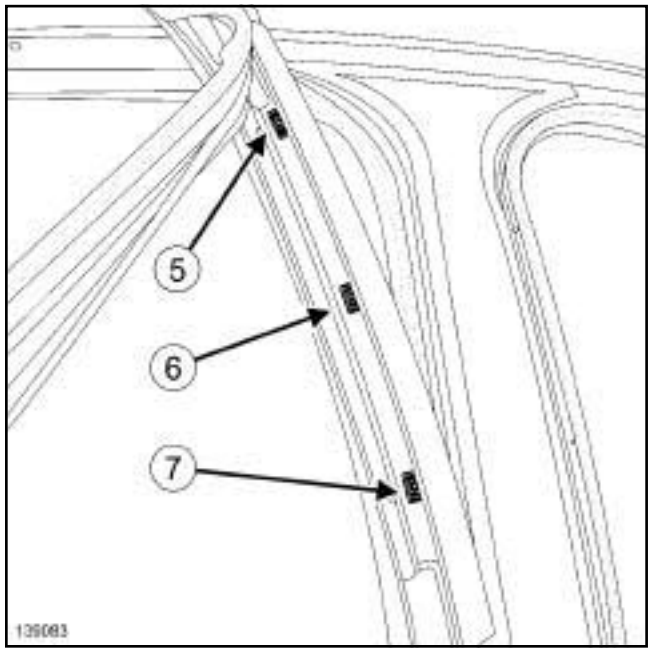

139083

❑ Remove the bolts (**5**) , (**6**) and (**7**) .

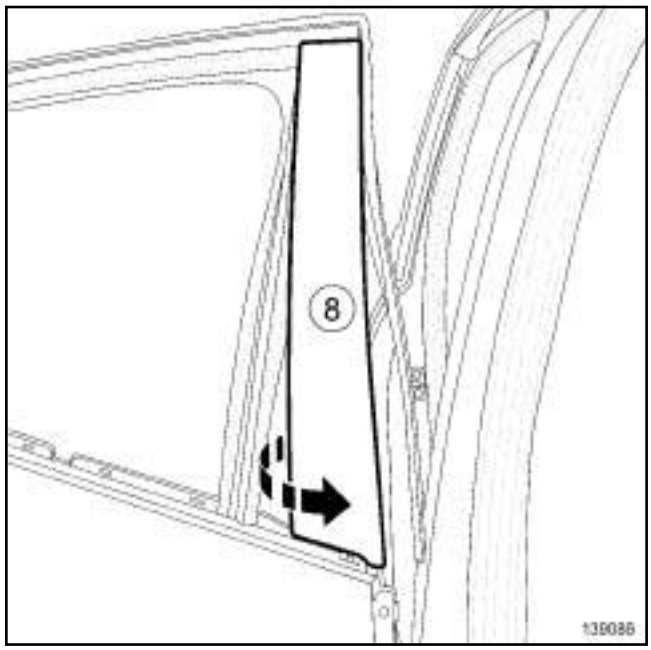

139086

❑ Remove the front section of the rear side door pillar exterior trim (**8**) .

B95 or J95 or K95

2 - Rear section of rear side door pillar exterior trim

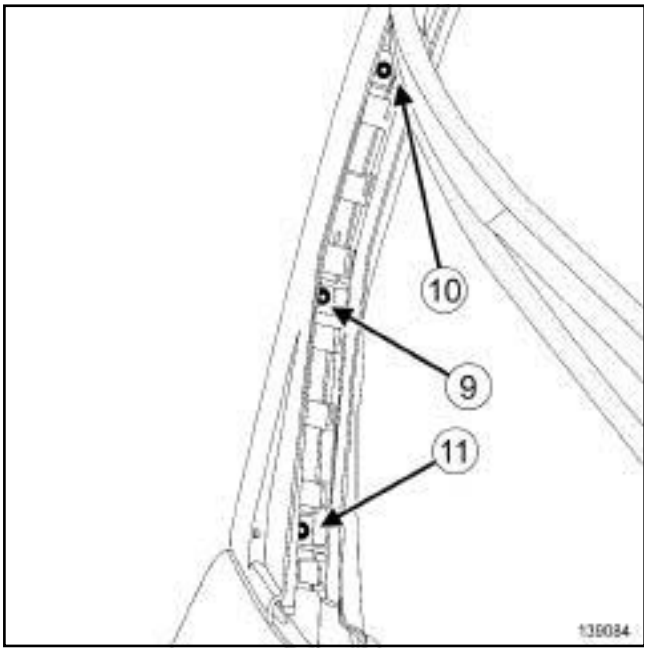

139084

❑ Remove the bolts (**9**) , (**10**) and (**11**) .

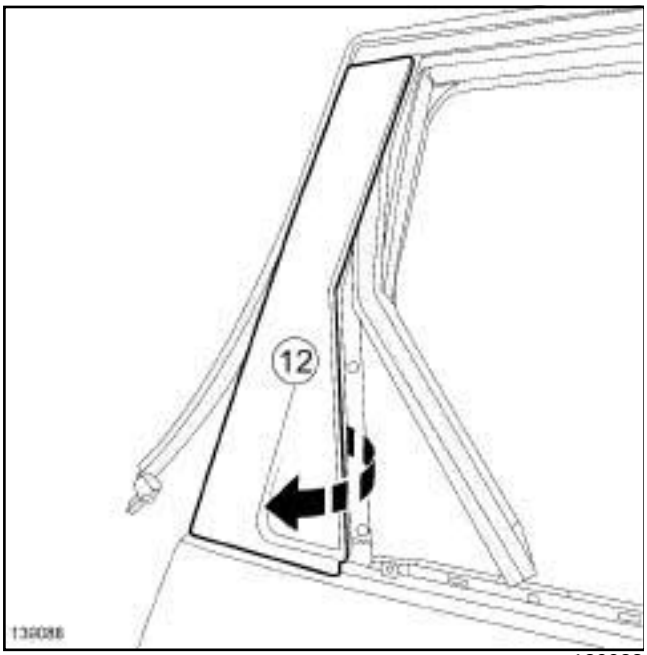

139088

❑ Remove the rear section of the rear side door pillar exterior trim (**12**) .

REFITTING

I - REFITTING PREPARATION OPERATION

❑ **parts always to be replaced: parts included in the acoustic and fitting foam kit (50,07,04,14)**.

II - REFITTING OPERATION FOR PART CONCERNED

B95 or K95

❑ Refit the lower section of the rear side door pillar exterior trim.

❑ Fit the upper section of the rear side door glass run channel.

❑ Position the rear side door pillar exterior trim on the upper section of the window run channel.

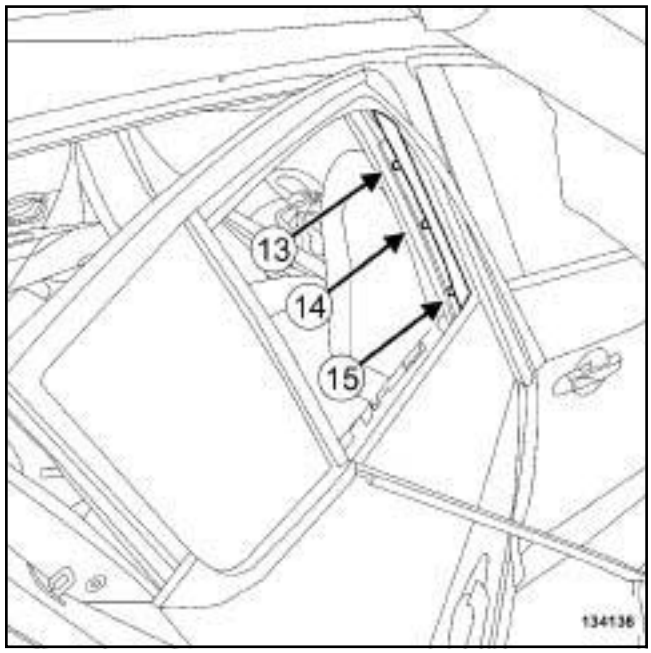

134136

❑ Refit:

- the centre bolt (**14**) while holding the rear side door pillar exterior trim in place,
- the upper (**15**) and lower bolts (**13**) .

B95 or J95 or K95

J95

1 - Front section of rear side door pillar exterior trim

❏ Refit the lower part of the front section of the rear side door pillar exterior trim.

❏ Fit the upper part of the front section of the rear side door window run channel.

❏ Position the front section of the rear side door pillar exterior trim on the upper section of the window run channel.

❏ Refit:

- the centre bolt ***(6)*** while holding the front section of the rear side door pillar exterior trim in place,
- the upper ***(5)*** and lower bolts ***(7)*** .

2 - Rear section of rear side door pillar exterior trim

❏ Refit the lower part of the rear section of the rear side door pillar exterior trim.

❏ Fit the upper part of the rear section of the rear side door window run channel.

❏ Position the rear section of the rear side door pillar exterior trim on the upper section of the window run channel.

❏ Refit:

- the centre bolt ***(9)*** while holding the rear section of the rear side door pillar exterior trim in place,
- the upper ***(10)*** and lower bolts ***(11)*** .

III - FINAL OPERATION

J95

❏ Refit:

- the rear side door window glass run channel,
- the exterior weatherstrip.

❏ Check the alignment of the rear side door pillar exterior trim with the front door.

Note:

If the clearance between the rear side door pillar exterior trim and the front side door is skewed, adhesive shims may be bonded to the rear side door pillar exterior trim supports to compensate. This operation requires the removal of the rear side door exterior trim.

J95

❏ Engage clip ***(2)*** .

❏ Refit the sliding window in the rear side door (see **54A**, **Windows**, **Sliding window in rear side door: Removal - Refitting**, page **54A-7**) .

B95 or K95

❏ Refit the rear speaker (see **Rear speakers: Removal - Refitting**) (86A, Radio).

❏ Refit the door sealing films (see **Door sealing film: Removal - Refitting**) (65A, Opening elements sealing).

❏ Carry out a sealing test (see **Technical Note 0653A**).

❏ Refit the rear side door trim (see **Rear side door trim: Removal - Refitting**) (72A, Side opening element trim).

Scuttle panel grille: Removal - Refitting

B95 or D95 or K95

Essential special tooling	
Car. 1363	Set of trim removal levers.

REMOVAL

I - REMOVAL PREPARATION OPERATION

❑ Remove the windscreen wiper arms (see **Windscreen wiper arm: Removal - Refitting**) (85A, Wiping - Washing).

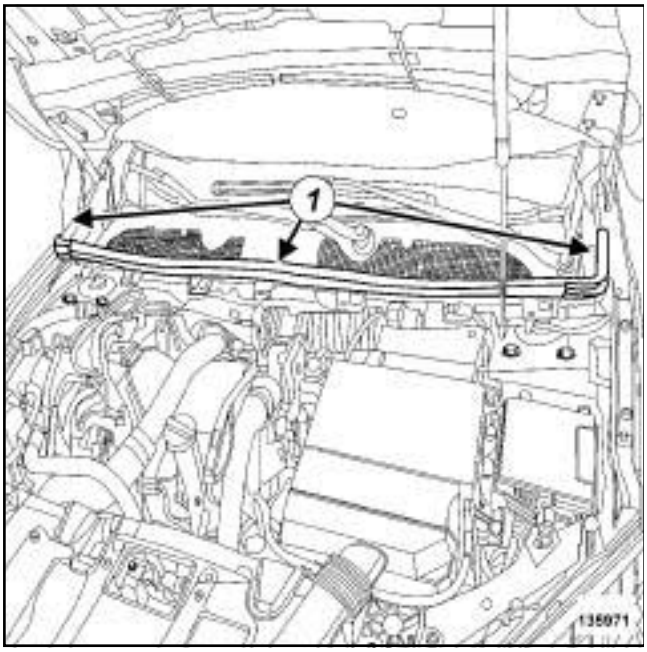

135971

❑ Remove the sealing rings (**1**) .

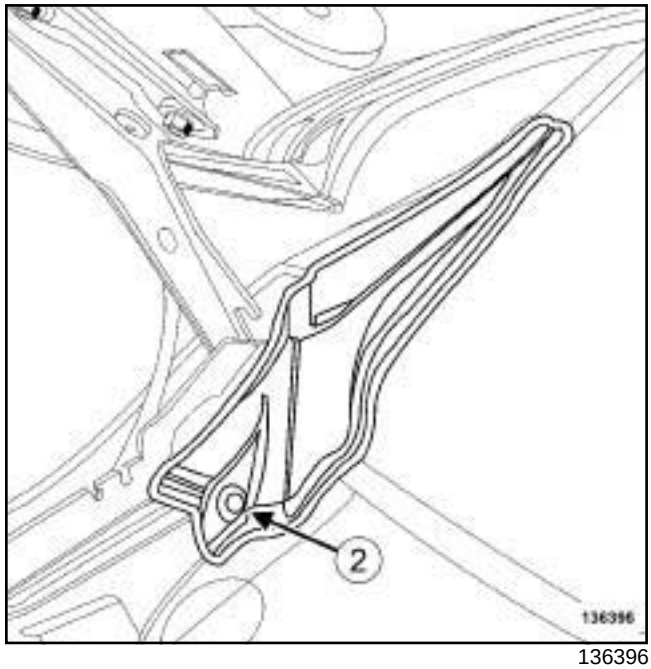

136396

❑ Remove the clips (**2**) .

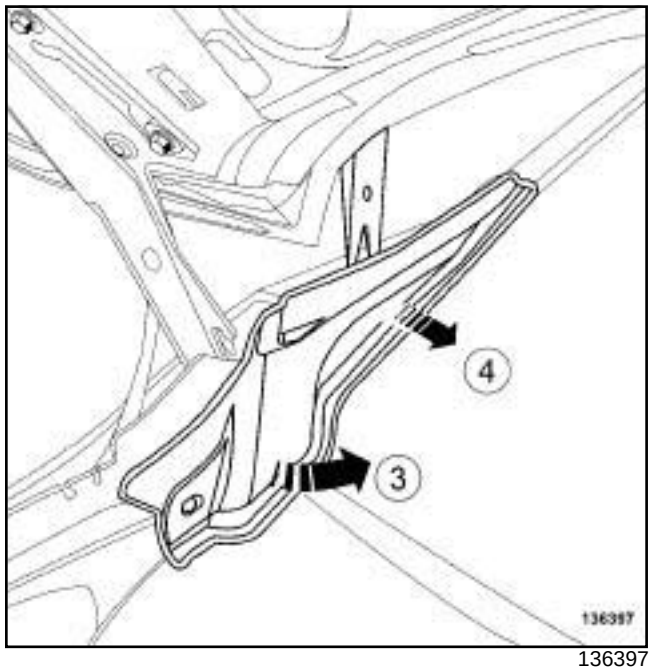

136397

❑ Unclip the lower windscreen trims using the tool **(Car. 1363)** by slightly turning the upper clip at (**3**) and (**4**) .

B95 or D95 or K95

II - OPERATION FOR REMOVAL OF PART CONCERNED

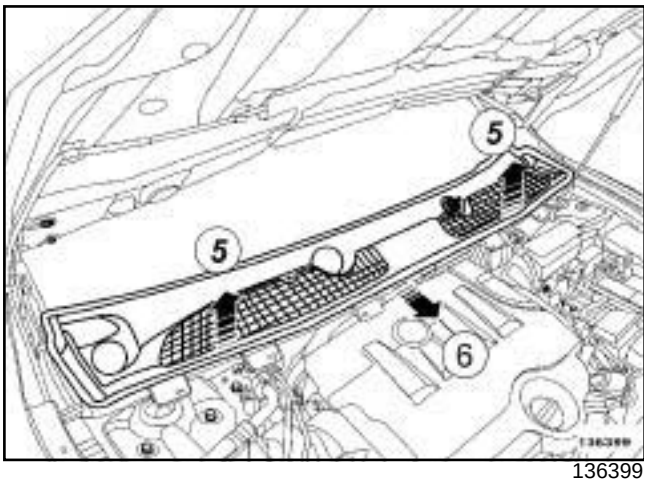

136399

❑ Remove the scuttle panel grille at (**5**) and (**6**) .

REFITTING

I - REFITTING PREPARATION OPERATION

❑

> Note:
>
> Check that the windscreen and the scuttle panel grille are clean before refitting.

❑ **parts always to be replaced: clip under scuttle panel grille (50,07,06,12)**.

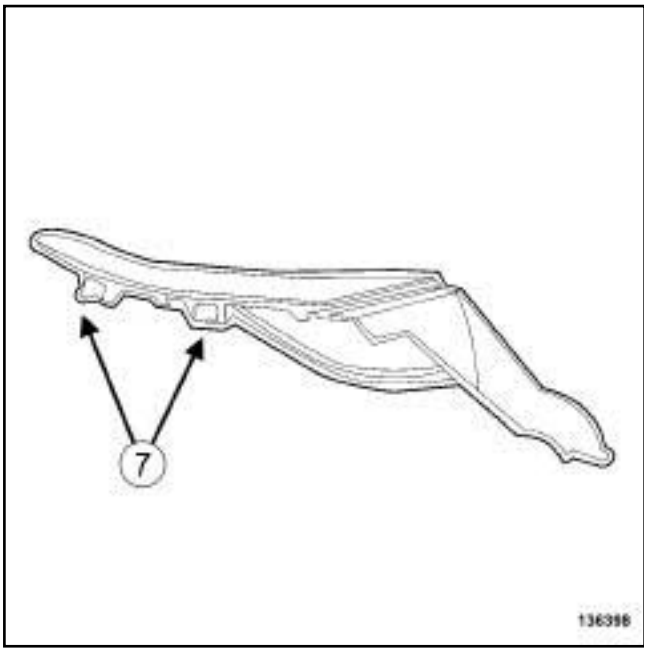

136398

❑ Check the clips (**7**) on the windscreen lower trims and replace them, if necessary.

II - OPERATION FOR REFITTING PART CONCERNED

❑ Refit the scuttle panel grille.

III - FINAL OPERATION

❑ Clip on the lower windscreen trims.

❑ Refit:

- the clips,
- the seals,
- the windscreen wiper arms (see **Windscreen wiper arm: Removal - Refitting**) (85A, Wiping - Washing).

J95

REMOVAL

I - REMOVAL PREPARATION OPERATION

1 - Centre section of the scuttle panel grille

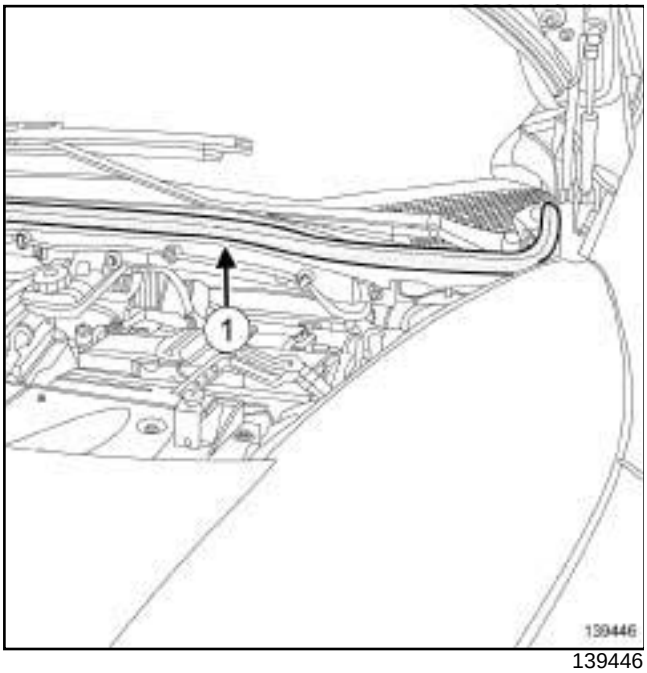

139446

❑ Remove the bonnet seal (**1**) .

2 - Side sections of the scuttle panel grille

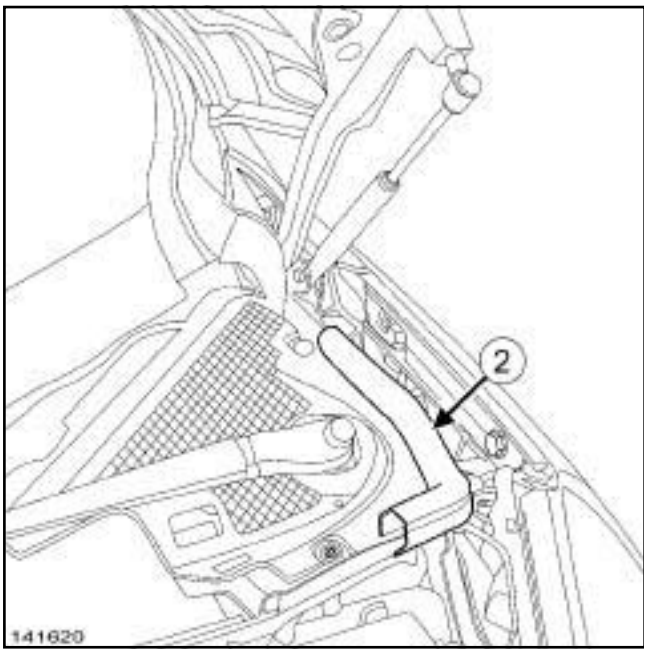

141620

❑ Remove:

- the bonnet side seals (**2**) ,
- the windscreen wiper arms (see **Windscreen wiper arm: Removal - Refitting**) (85A, Wiping - Washing).

II - OPERATION FOR REMOVAL OF PART CONCERNED

1 - Centre section of the scuttle panel grille

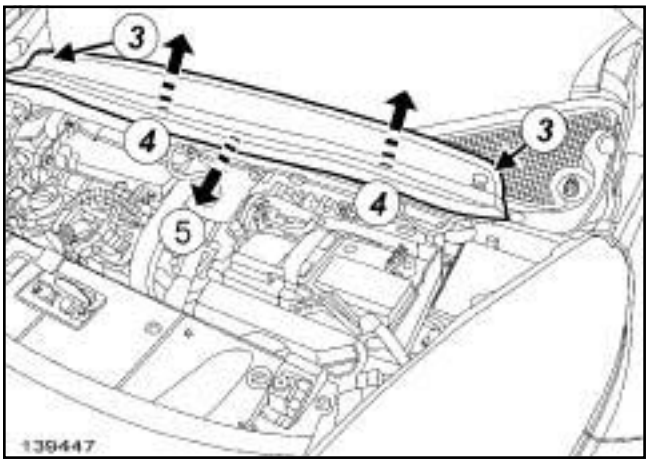

139447

❑ Unclip the centre section of the scuttle panel grille using a flat-blade screwdriver at (**3**) .

❑ Remove the centre section of the scuttle panel grille at (**4**) and (**5**) .

J95

2 - Side sections of the scuttle panel grille

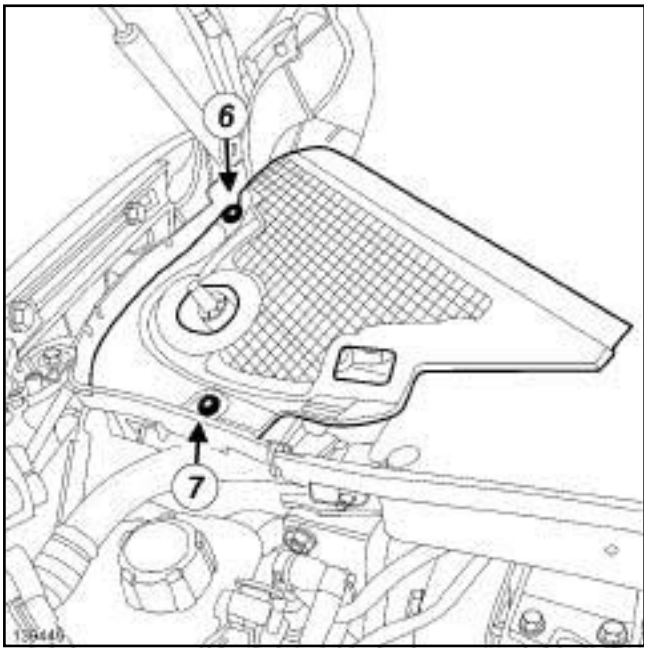

139449

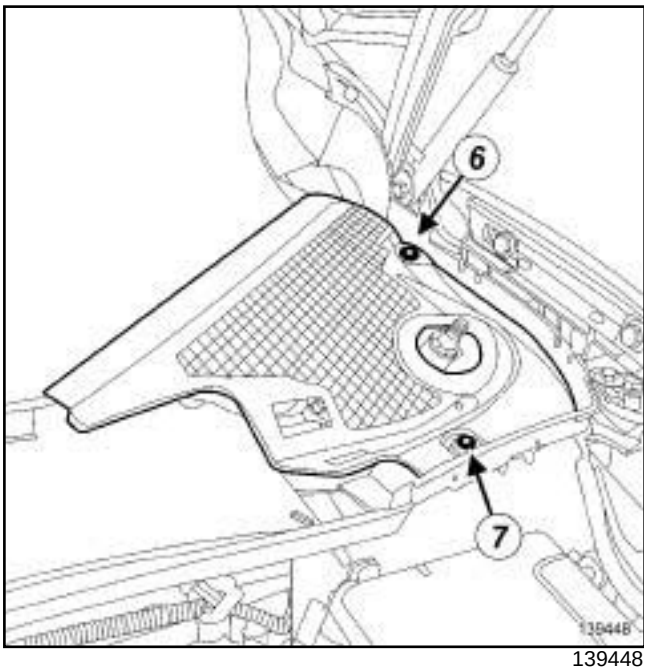

139448

❑ Remove:

- plastic rivets (**6**) ,
- the bolts (**7**) .

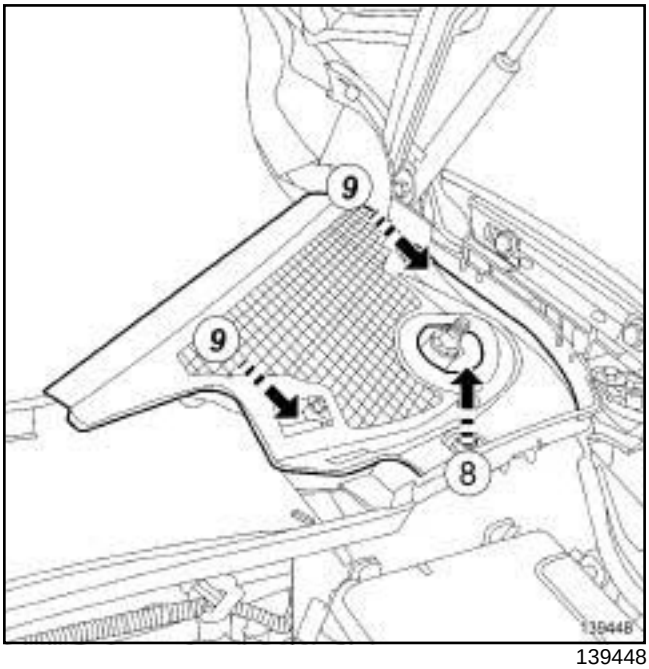

139448

❑ Remove the side sections of the scuttle panel grille at (**8**) and at (**9**) .

REFITTING

I - REFITTING PREPARATION OPERATION

❑ **parts always to be replaced: clip under scuttle panel grille (50,07,06,12)**.

II - REFITTING OPERATION FOR PART CONCERNED

1 - Side sections of the scuttle panel grille

❑ Refit:

- the side sections of the scuttle panel grille,
- the bolts ***(7)*** ,
- the plastic rivets ***(6)*** .

2 - Centre section of the scuttle panel grille

❑ Refit the centre section of the scuttle panel grille.

❑ Clip the centre section of the scuttle panel grille in place.

J95

III - FINAL OPERATION

1 - Side sections of the scuttle panel grille

❏ Refit:

- the windscreen wiper arms (see **Windscreen wiper arm: Removal - Refitting**) (85A, Wiping - Washing),
- the bonnet side seals ***(2)*** .

2 - Centre section of the scuttle panel grille

❏ Refit the bonnet seal ***(1)*** .

D95

REMOVAL

I - REMOVAL PREPARATION OPERATION

❑ Partially remove the tailgate trim.

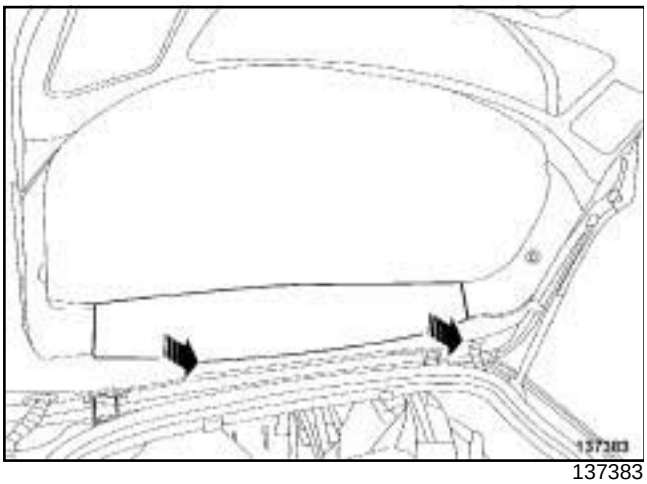

137383

❑ Remove the centre section.

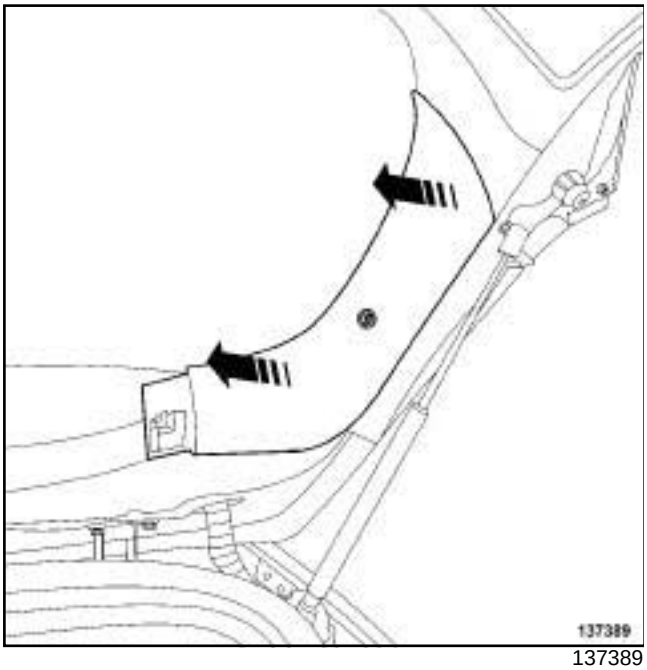

137389

❑ Remove the side sections.

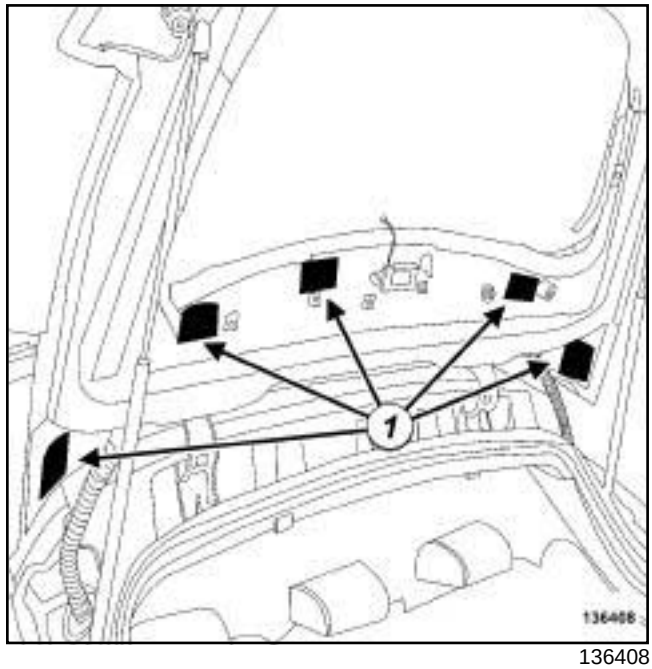

136408

❑ Remove the adhesive foam (**1**) .

II - OPERATION FOR REMOVAL OF PART CONCERNED

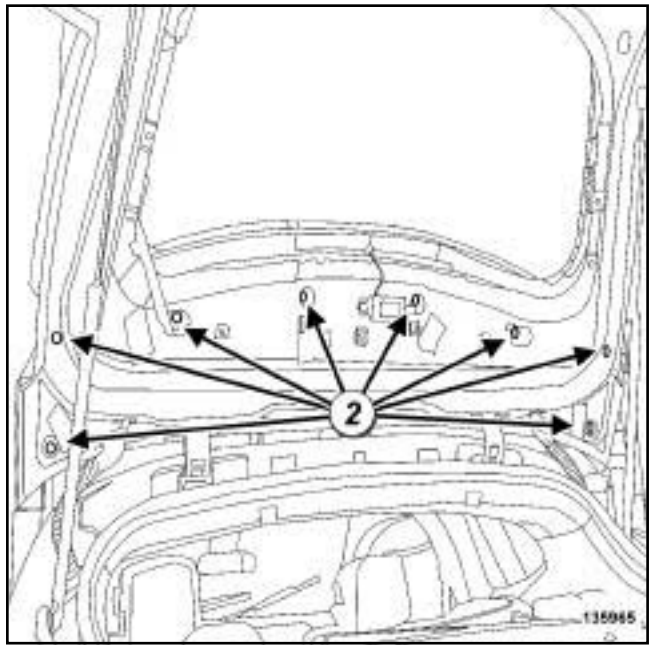

135965

❑ Remove the bolts (**2**) .

D95

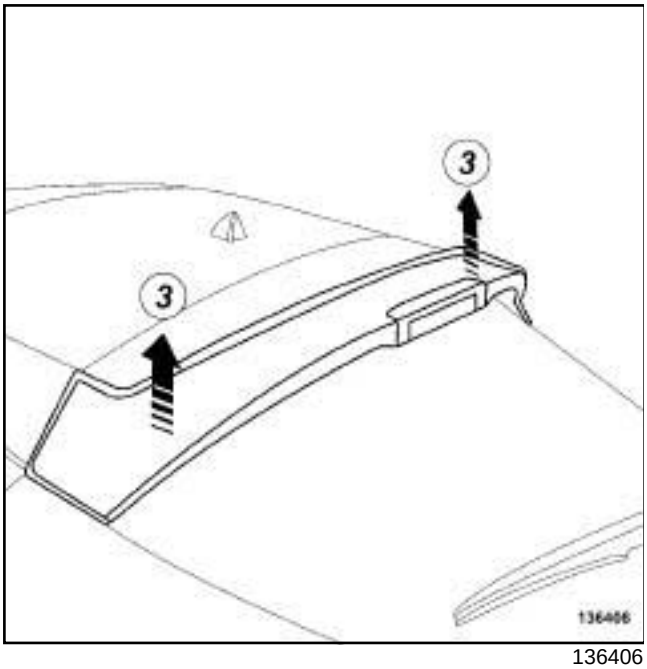

136406

❑ Partially unclip the tailgate spoiler at (**3**) .

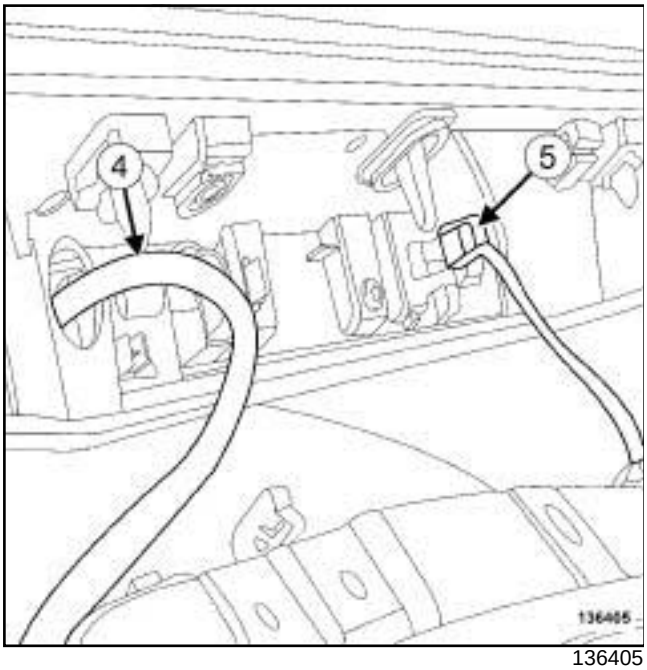

136405

❑ Disconnect:

- the rear screen washer jet pipe (**4**) ,
- the high level brake light connector (**5**) .

❑ Remove the tailgate spoiler.

REFITTING

I - REFITTING PREPARATION OPERATION

❑ **parts always to be replaced: parts included in the sealing kit (50,07,02,07)**.

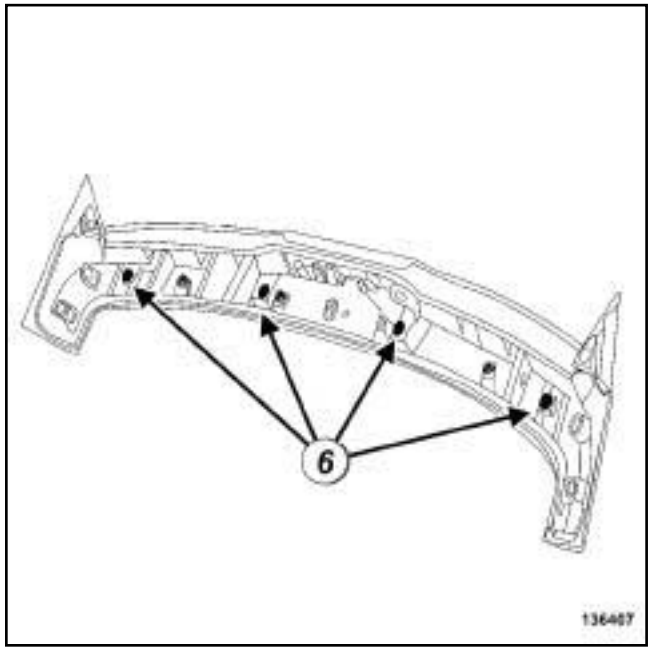

136407

❑ Check the condition of the clips (**6**) and replace them if necessary.

II - REFITTING OPERATION FOR PART CONCERNED

❑ Connect:

- the high level brake light connector ***(5)*** ,
- the rear screen washer jet pipe ***(4)*** .

❑ Fit the tailgate spoiler.

❑ Clip the tailgate spoiler.

❑ Refit the bolts ***(2)*** starting at the centre and working outwards.

III - FINAL OPERATION

❑ Refit:

- the blanking covers ***(1)*** ,
- the side sections,
- the centre section.

❑ Carry out a function test.

B95 or D95 or K95

REMOVAL

I - REMOVAL PREPARATION OPERATION

1 - Centre section of the scoop under the scuttle panel grille

❑ Remove:

- the windscreen wiper arms (see **Windscreen wiper arm: Removal - Refitting**) (85A, Wiping - Washing),
- the scuttle panel grille (see **56A**, **Exterior equipment**, **Scuttle panel grille: Removal - Refitting**, page **56A-1**) .

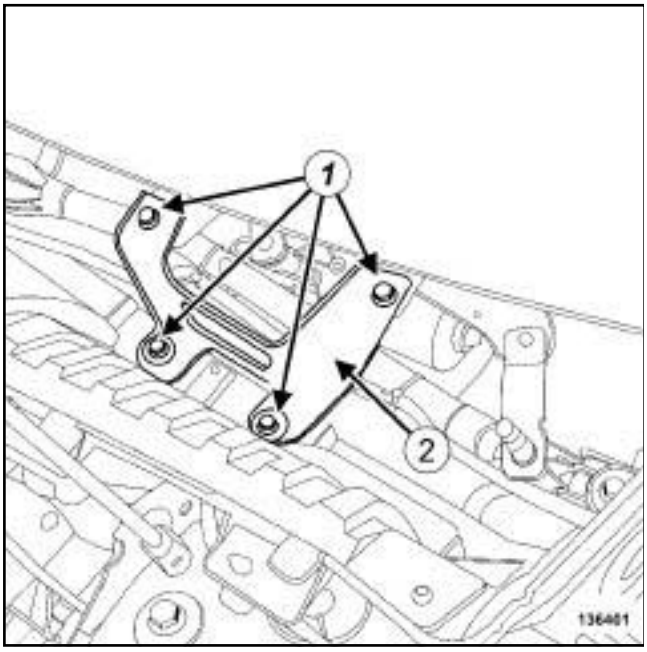

136401

❑ Remove:

- the bolts (**1**) , marking them according to their length,
- the reinforcing linkage (**2**) .

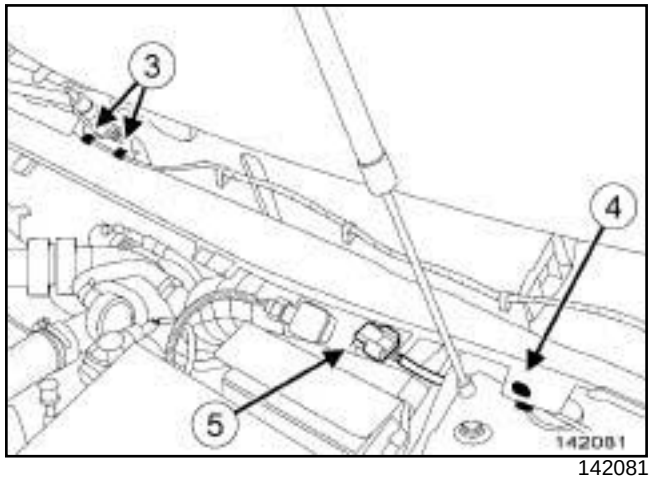

142081

❑ Unclip:

- the wiper motor wiring at (**3**) ,
- the clip (**4**) ,
- the spare connector (**5**) .

2 - Side section of the scoop under the scuttle panel grille

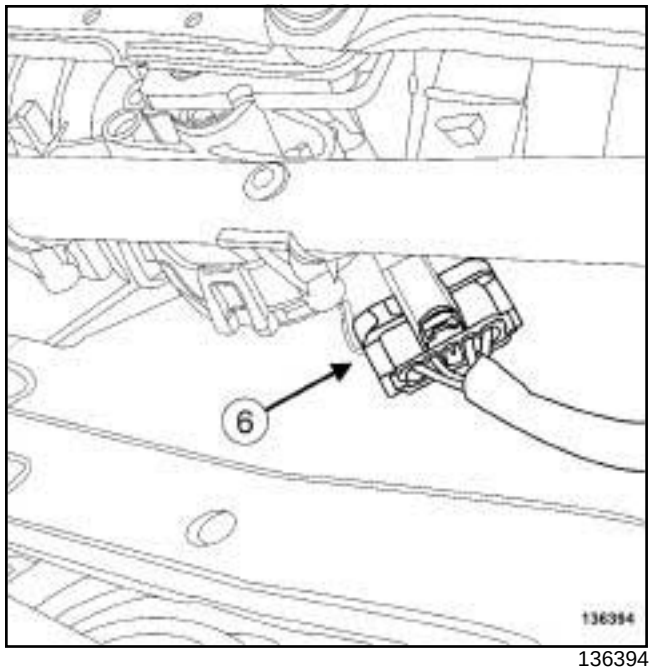

136394

❑ Disconnect the connector from the windscreen wiper motor (**6**) .

B95 or D95 or K95

DOOR OPEN SYST. 433 NML

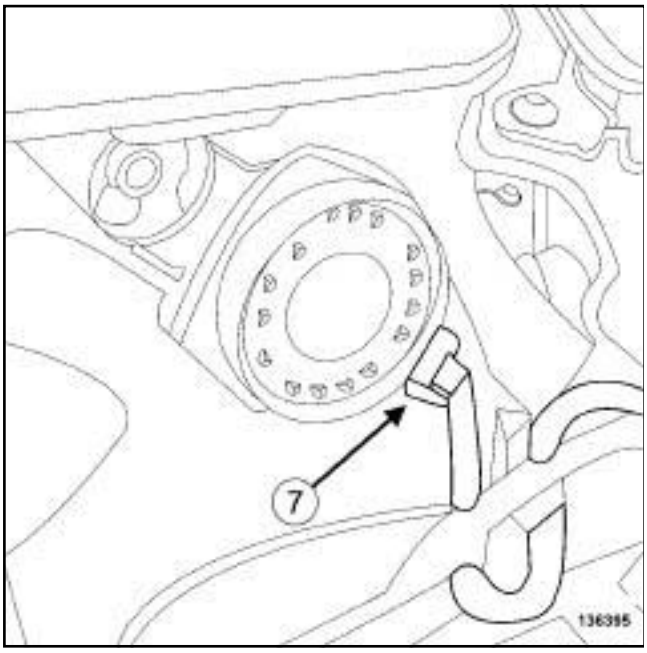

136395

❑ Disconnect the connector from the remote central door locking warning (**7**) .

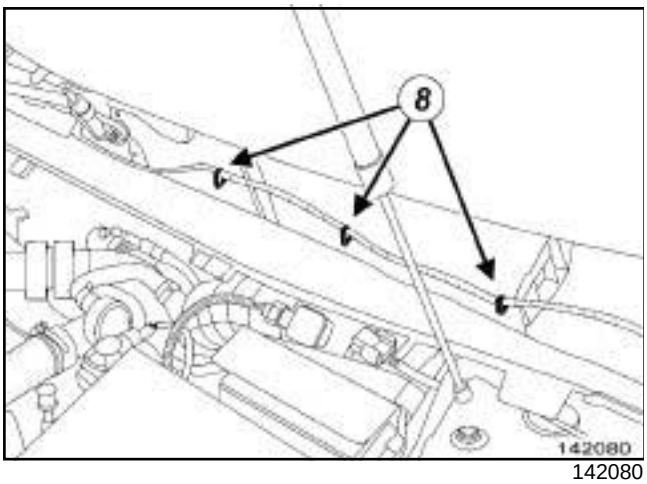

142080

❑ Unclip the wiring (**8**)

II - OPERATION FOR REMOVAL OF PART CONCERNED

1 - Centre section of the scoop under the scuttle panel grille

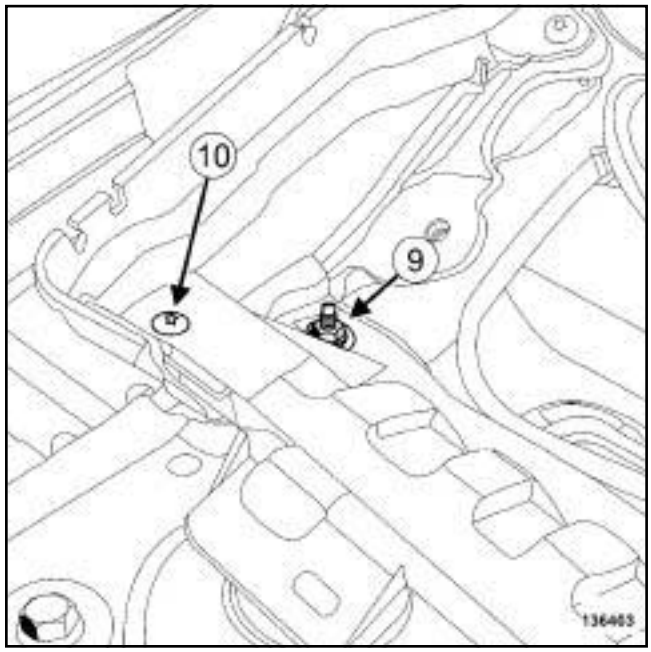

136403

❑ Remove:

- the nuts (**9**) ,
- the bolts (**10**)

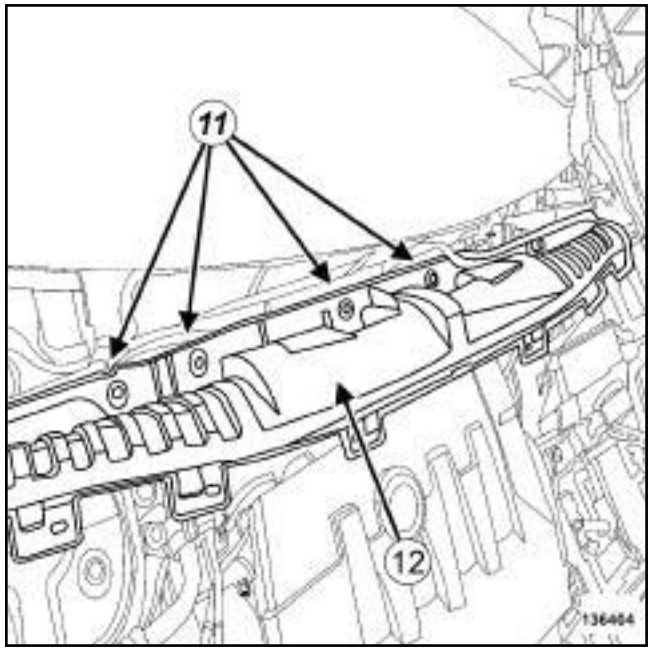

136404

❑ Remove:

- the bolts (**11**) ,

B95 or D95 or K95

- the scoop under the central part of the scuttle panel grille (**12**) .

2 - Side section of the scoop under the scuttle panel grille

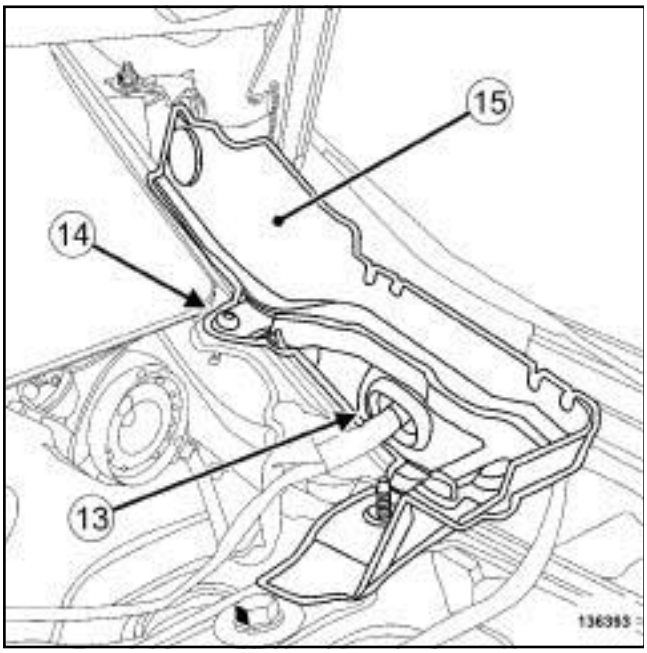

136393

❑ Remove:

- the wiring (**13**)
- the bolts (**14**) from the scoops under the side sections of the scuttle panel grille,
- the scoops under the side sections of the scuttle panel grille (**15**) .

REFITTING

I - REFITTING PREPARATION OPERATION

❑

> Note:
>
> Clean the sealing foam on the scoop under the scuttle panel grille and the joint surface.

❑ **parts always to be replaced: Deflector sealing foam under scuttle panel grille (50,07,06,09)**.

II - REFITTING OPERATION FOR PART CONCERNED

1 - Side section of the scoop under the scuttle panel grille

❑ Refit the scoops under the side sections of the scuttle panel grille.

2 - Centre section of the scoop under the scuttle panel grille

❑ Refit the scoop under the central part of the scuttle panel grille.

III - FINAL OPERATION

1 - Side section of the scoop under the scuttle panel grille

❑ Clip on the wiring.

DOOR OPEN SYST. 433 NML

❑ Connect the connector of the remote central door locking warning.

❑ Connect the windscreen wiper motor connector.

2 - Centre section of the scoop under the scuttle panel grille

❑ Refit:

- the spare connector ***(5)*** .
- the clip ***(4)*** ,
- the wiper motor wiring,
- the reinforcing linkage,
- the scuttle panel grille (see **56A**, **Exterior equipment**, **Scuttle panel grille: Removal - Refitting**, page **56A-1**) ,
- the windscreen wiper arms (see **Windscreen wiper arm: Removal - Refitting**) (85A, Wiping - Washing).

❑ Carry out a function test.

J95

Tightening torques ▽	
secondary brake fluid reservoir bolts	**8 N.m**

REMOVAL

I - REMOVAL PREPARATION OPERATION

1 - Centre section of the scoop under the scuttle panel grille

❑

> Note:
>
> It is not necessary to remove the windscreen wiper arms in order to remove the centre section of the scoop under the scuttle panel grill.

Remove the centre section of the scuttle panel grille (see **56A**, **Exterior equipment**, **Scuttle panel grille: Removal - Refitting**, page **56A-1**) .

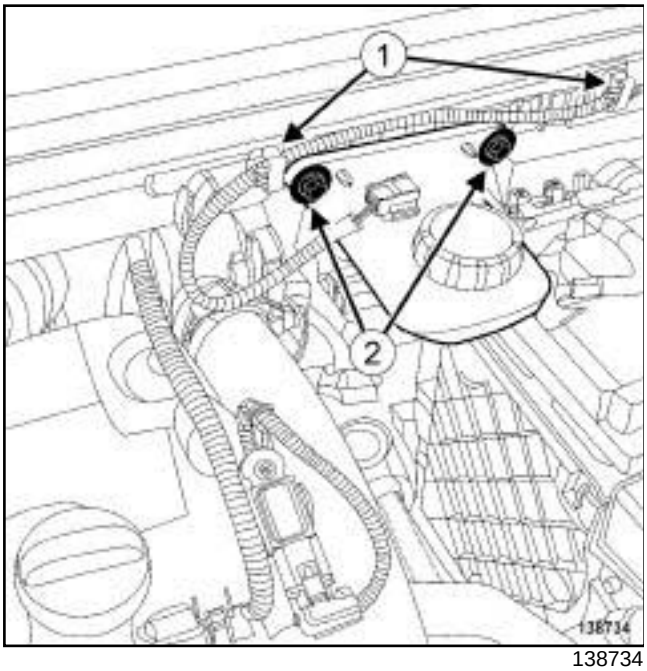

138734

❑ Unclip the secondary brake fluid reservoir wiring at (**1**) .

❑ Remove the secondary brake fluid reservoir bolts (**2**) .

❑ Move aside the secondary brake fluid reservoir.

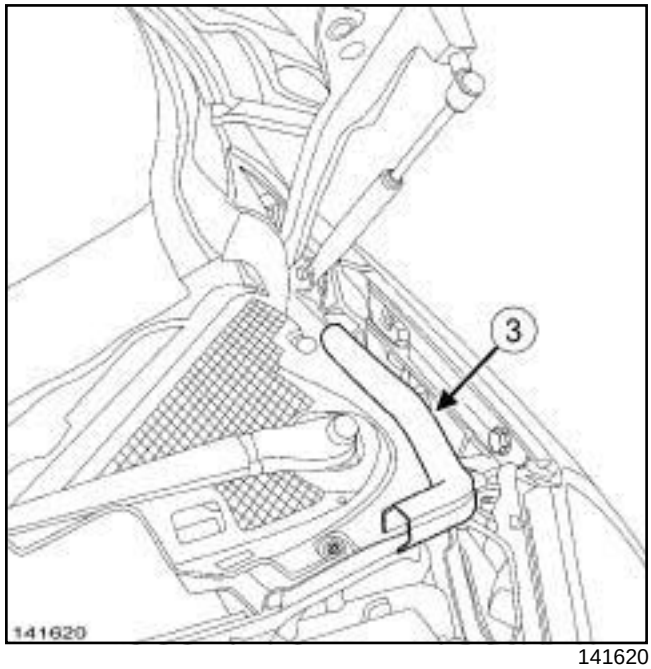

141620

❑ Remove the bonnet side seal (**3**) .

J95

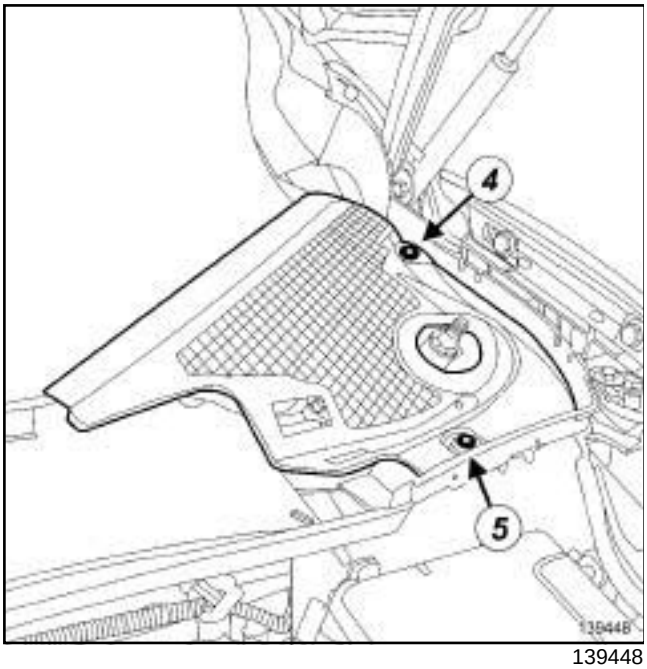

139448

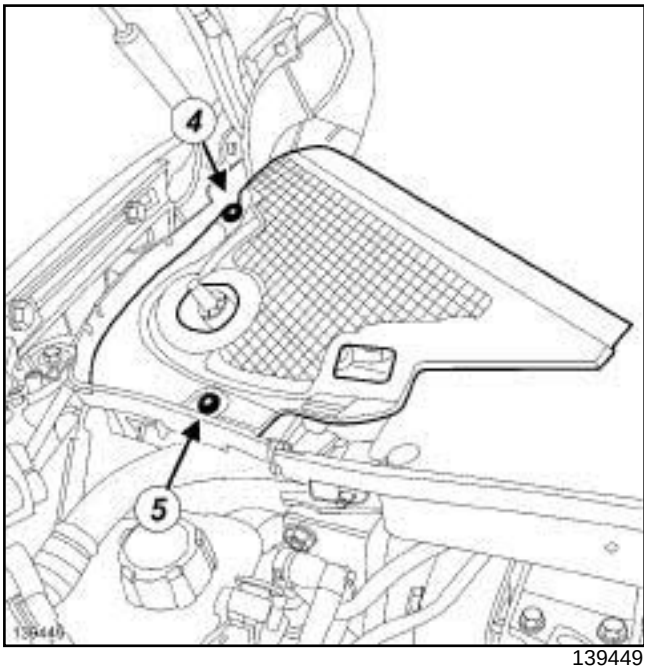

139449

❑ Remove:

- plastic rivets (**4**) ,
- the bolts (**5**) .

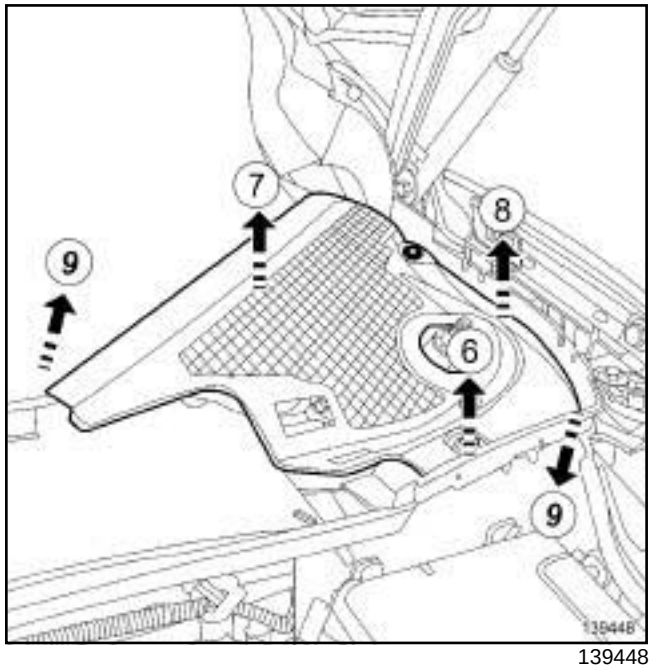

139448

❑ Lift the side sections of the scuttle panel grille at (**6**) .

❑ Unclip the side sections of the scuttle panel grille at (**7**) .

❑ Lift the side sections of the scuttle panel grille at (**8**) .

❑ Pivot the side sections of the scuttle panel grille at (**9**) .

2 - Side sections of the scoop under the scuttle panel grille

❑ Remove:

- the windscreen wiper arms (see **Windscreen wiper arm: Removal - Refitting**) (85A, Wiping - Washing),
- the side sections of the scuttle panel grille (see **56A**, **Exterior equipment**, **Scuttle panel grille: Removal - Refitting**, page **56A-1**) .

J95

II - OPERATION FOR REMOVAL OF PART CONCERNED

1 - Centre section of the scoop under the scuttle panel grille

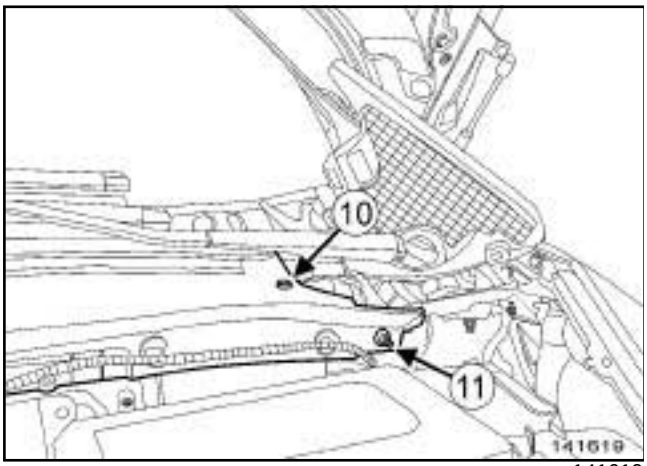

141619

❑ Remove:

- the clips (**10**) ,
- the nuts (**11**) .

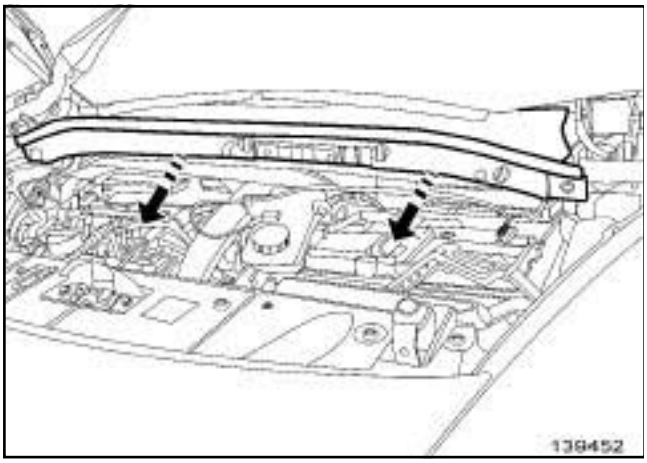

139452

❑ Remove the centre section of the scoop under the scuttle panel grille.

2 - Side sections of the scoop under the scuttle panel grille

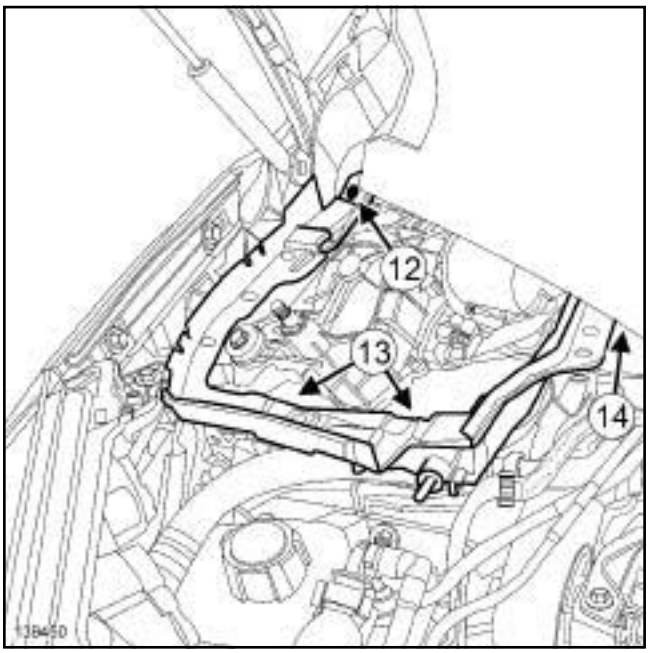

139450

❑ Remove:

- the clips (**12**) ,
- the bolts (**13**) ,
- the nuts (**14**) ,
- the side sections of the scoop under the scuttle panel grille.

REFITTING

I - REFITTING PREPARATION OPERATION

❑ Clean the relevant joint areas of the scoop under the scuttle panel grille.

II - REFITTING OPERATION FOR PART CONCERNED

1 - Side sections of the scoop under the scuttle panel grille

❑ Refit:

- the side sections of the scoop under the scuttle panel grille,
- the nuts (**14**) ,
- the bolts (**13**) ,
- the clips (**12**) .

J95

2 - Centre section of the scoop under the scuttle panel grille

❏ Refit:

- the centre section of the scoop under the scuttle panel grille,
- the nuts (**11**) ,
- the clips (**10**) .

III - FINAL OPERATION

1 - Side sections of the scoop under the scuttle panel grille

❏ Refit:

- the side sections of the scuttle panel grille (see **56A**, **Exterior equipment**, **Scuttle panel grille: Removal - Refitting**, page **56A-1**) ,
- the windscreen wiper arms (see **Windscreen wiper arm: Removal - Refitting**) (85A, Wiping - Washing).

2 - Centre section of the scoop under the scuttle panel grille

❏ Fit the side sections of the scuttle panel grille.

❏ Refit:

- the bolts (**5**) ,
- plastic rivets (**4**) ,
- the bonnet side seals ***(3)*** .
- the secondary brake fluid reservoir.

❏ Torque tighten the **secondary brake fluid reservoir bolts (8 N.m)**.

❏ Clip the secondary brake fluid reservoir wiring in place.

❏ Refit the centre section of the scuttle panel grille (see **56A**, **Exterior equipment**, **Scuttle panel grille: Removal - Refitting**, page **56A-1**) .

B95 or D95 or K95

REMOVAL

I - REMOVAL PREPARATION OPERATION

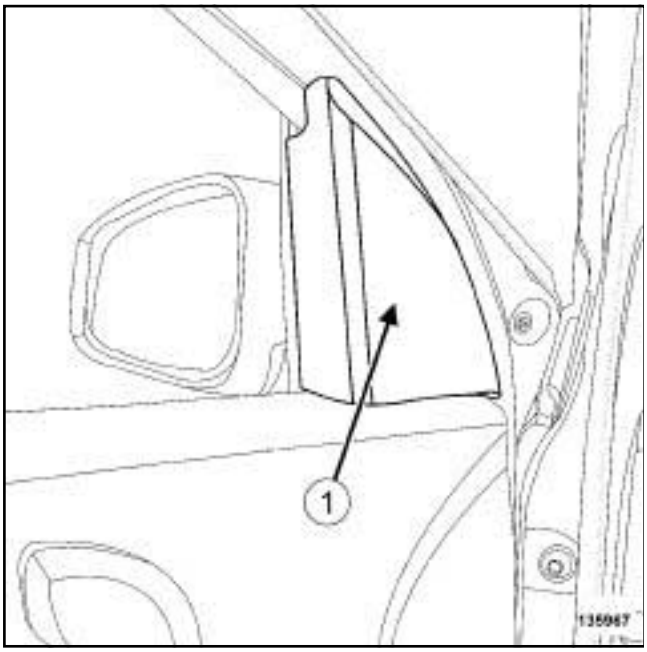

135967

❑ Remove the door mirror trim (**1**) .

II - OPERATION FOR REMOVAL OF PART CONCERNED

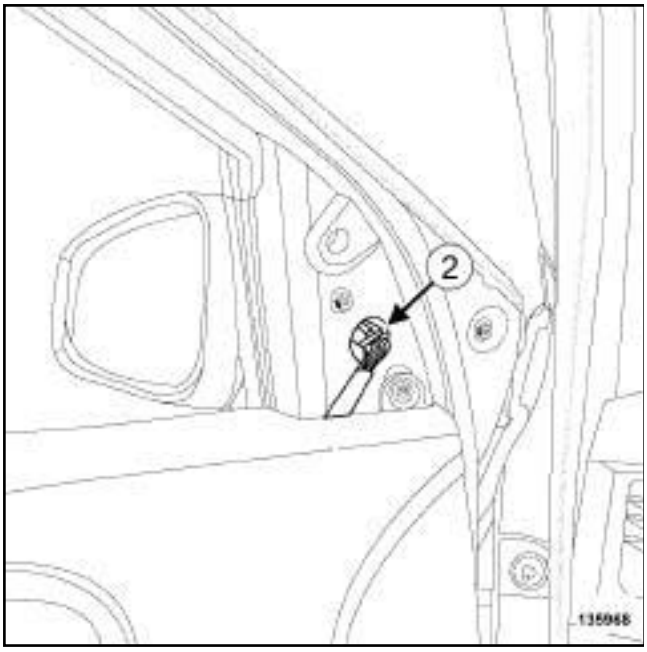

135968

❑ Disconnect the connector (**2**) .

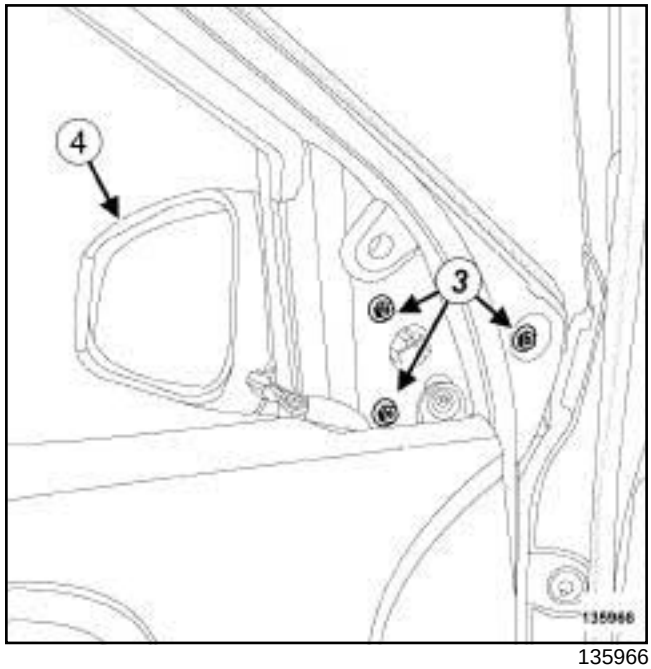

135966

❑ Remove:

- the bolts (**3**) ,
- the door mirror (**4**) .

REFITTING

I - REFITTING OPERATION FOR PART CONCERNED

❑ Refit:

- the door mirror ***(4)*** ,
- the bolts ***(3)*** .

❑ Connect the connector ***(2)*** .

❑ Carry out a function test.

II - FINAL OPERATION

❑ Refit the door mirror trim ***(1)*** .

J95

Tightening torques ▽	
door mirror bolts	**8 N.m**

REMOVAL

I - REMOVAL PREPARATION OPERATION

❑ Remove the front side door trim (see **Front side door trim: Removal - Refitting**) (72A, Side opening elements trim).

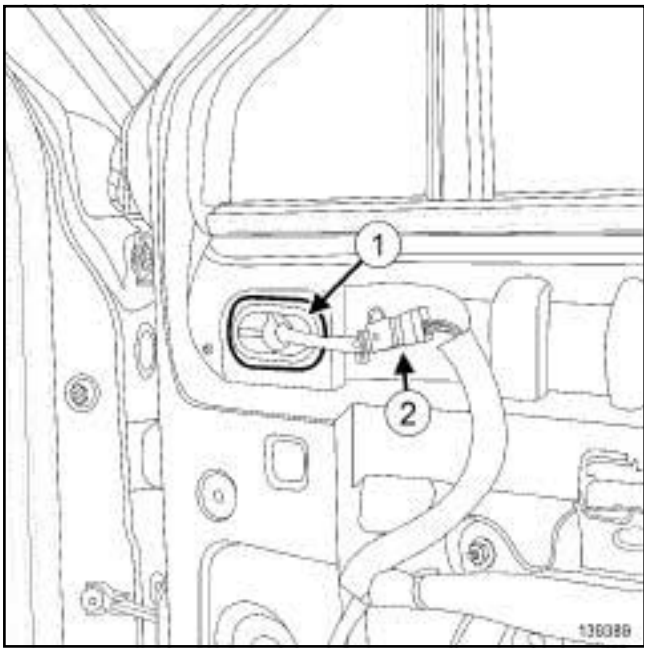

139389

❑ Remove the blanking cover (**1**) .

❑ Disconnect the connector (**2**) .

II - OPERATION FOR REMOVAL OF PART CONCERNED

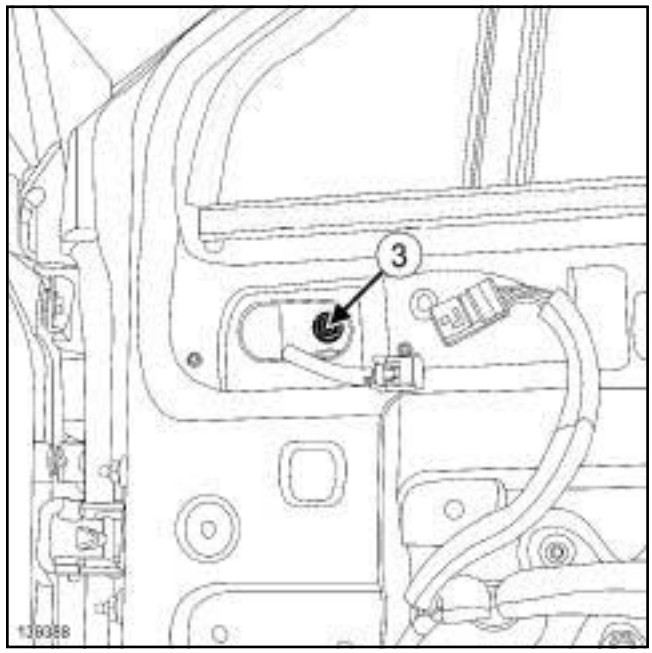

139388

❑ Remove:

- the bolt (**3**) ,
- the door mirror.

REFITTING

I - REFITTING OPERATION FOR PART CONCERNED

❑ Refit the door mirror.

❑ Torque tighten the **door mirror bolts (8 N.m)** ***(3)*** .

II - FINAL OPERATION

❑ Connect the connector ***(2)*** .

❑ Refit:

- the blanking cover ***(1)*** ,
- the front side door trim (see **Front side door trim: Removal - Refitting**) (72A, Side opening elements trim).

Essential special tooling	
Car. 1363	Set of trim removal levers.

REMOVAL

I - REMOVAL PREPARATION OPERATION

❑ Remove the door mirror glass (see **56A**, **Exterior equipment**, **Door mirror glass: Removal - Refitting**, page **56A-19**) .

II - OPERATION FOR REMOVAL OF PART CONCERNED

B95 or D95 or K95

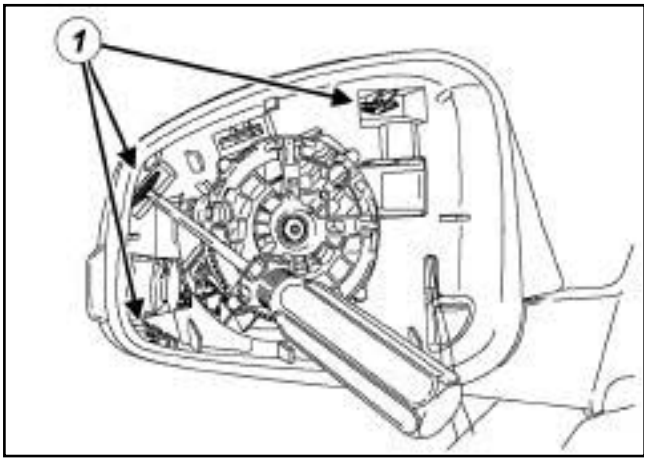

140754

❑ Unclip the door mirror casing at (**1**) .

❑ Remove the door mirror casing.

J95

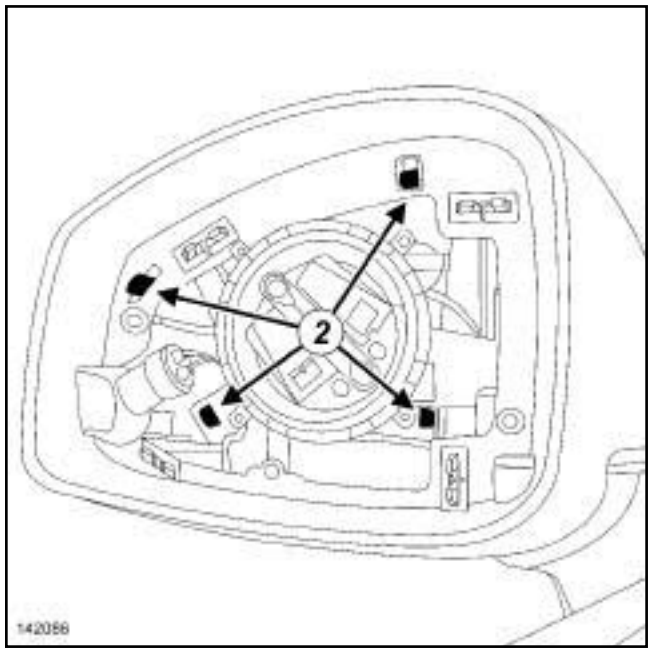

142086

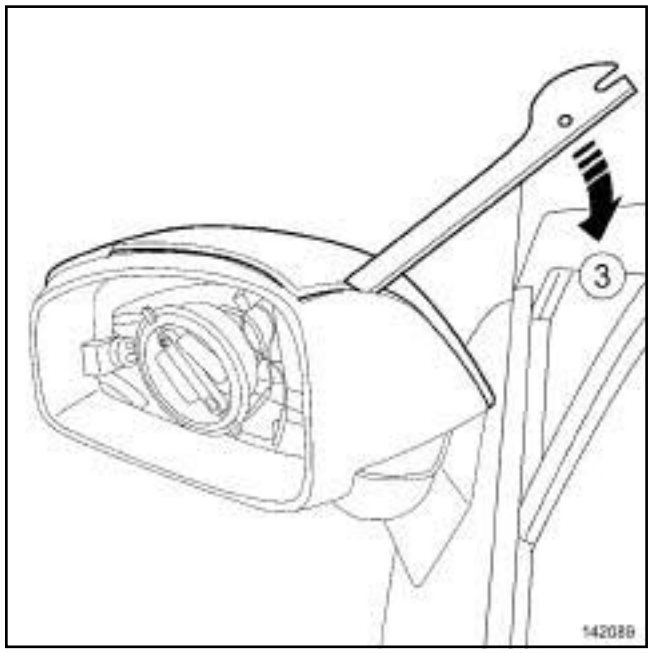

142089

❑ Unclip the door mirror casing at (**2**) and then at (**3**) using the tool **(Car. 1363)**.

❑ Remove the door mirror casing.

❏

Note:

The Parts Department supplies the door mirror casings unpainted, but the casings may be separated for painting.

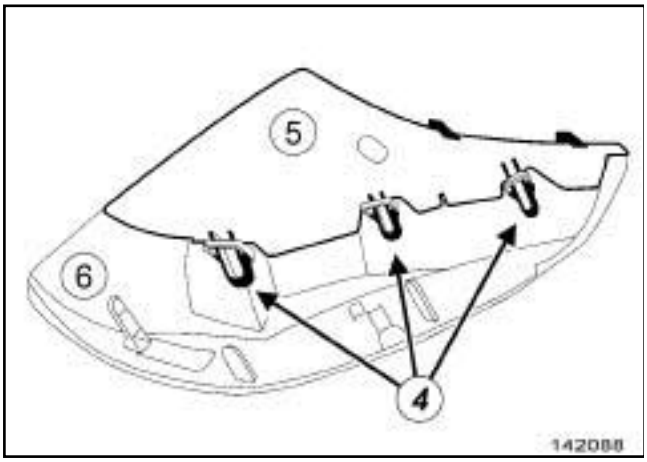

142088

❏ Squeeze the clips (**4**) .

❏ Separate the door mirror casings (**5**) and (**6**) .

REFITTING

I - REFITTING OPERATION FOR PART CONCERNED

J95

❏ Assemble the door mirror casings.

❏ Refit the door mirror casing.

II - FINAL OPERATION

❏ Refit the door mirror glass (see **56A**, **Exterior equipment**, **Door mirror glass: Removal - Refitting**, page **56A-19**) .

Essential special tooling	
Car. 1363	Set of trim removal levers.

REMOVAL

OPERATION FOR REMOVAL OF PART CONCERNED

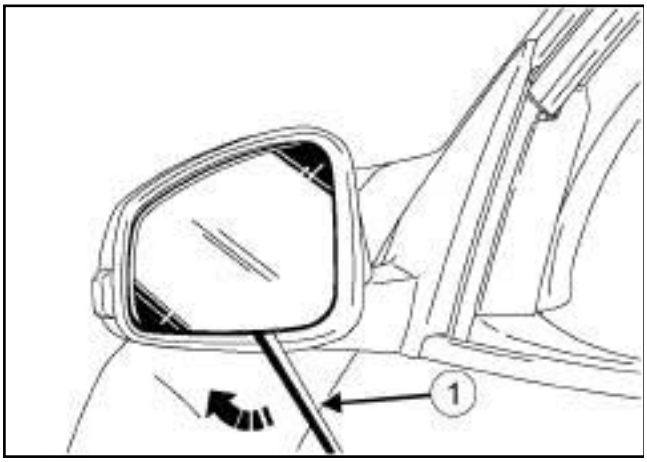

140756

- ❑ Protect the edges of the door mirror (**1**) with masking tape.
- ❑ Unclip the door mirror glass using the **(Car. 1363)**.
- ❑ Disconnect the connector.

REFITTING

I - REFITTING OPERATION FOR PART CONCERNED

- ❑ Connect the connector.
- ❑ Clip the exterior door mirror glass into place.

II - FINAL OPERATION

- ❑ Carry out a function test.

SATINY ROOF BARS

Essential special tooling	
Car. 1363	Set of trim removal levers.

Tightening torques ▽	
roof bar bolts	**12 N.m**

REMOVAL

I - REMOVAL PREPARATION OPERATION

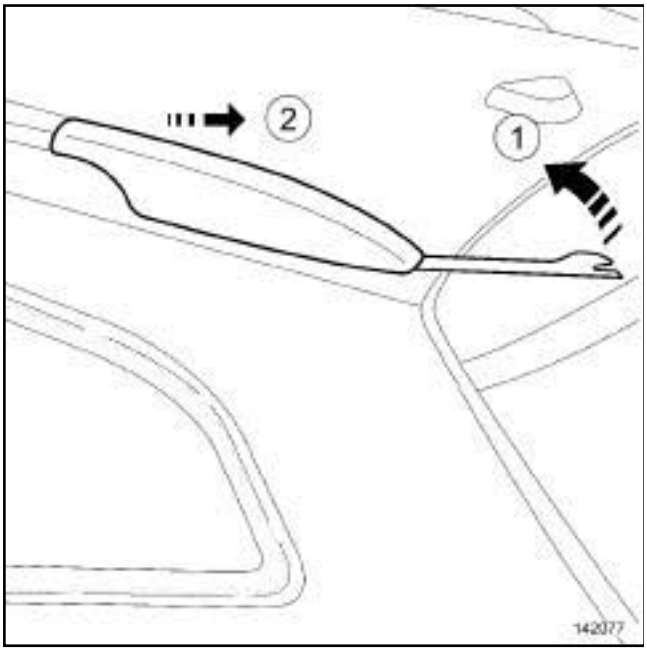

142077

❑ Remove the roof bar trims using the tool **(Car. 1363)** at (**1**) and (**2**) .

II - OPERATION FOR REMOVAL OF PART CONCERNED

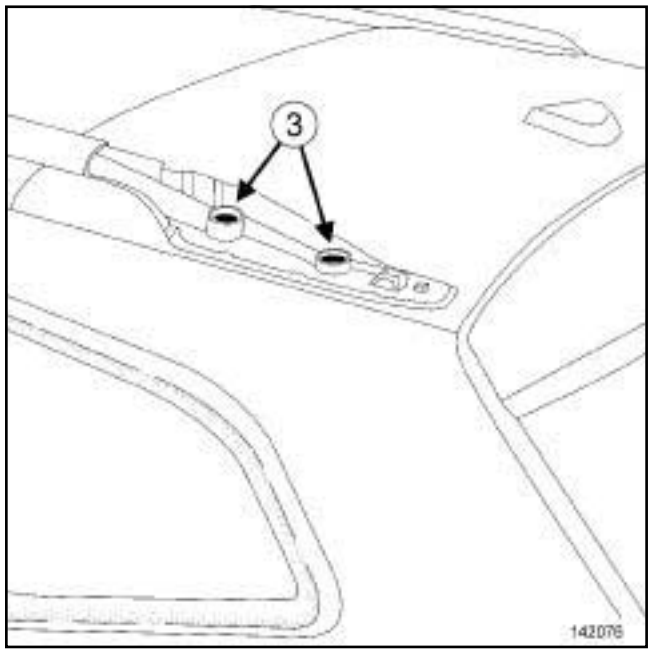

142076

❑ Remove:

- the roof bar bolts (**3**) ,
- the roof bar.

REFITTING

I - REFITTING PREPARATION OPERATION

❑ **parts always to be replaced: Roof bar bolts (50, 07,22,01)**.

❑ **parts always to be replaced: roof bar sealing foam (50,07,22,03)**.

SATINY ROOF BARS

II - REFITTING OPERATION FOR PART CONCERNED

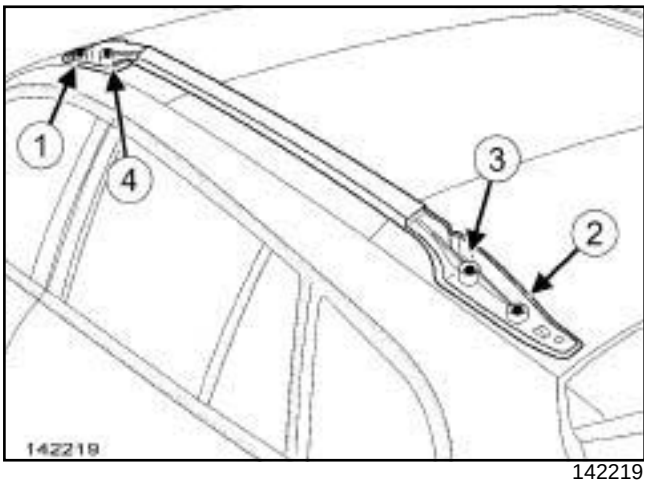

142219

❏ Refit the roof bar.

❏ Torque tighten in order the **roof bar bolts (12 N.m)**.

III - FINAL OPERATION

❏ Refit the roof bar trims.

Essential special tooling	
Car. 1363	Set of trim removal levers.

REMOVAL

REMOVAL OPERATION FOR THE MANUFACTURER'S BADGE

B95 or D95 or J95 or K95

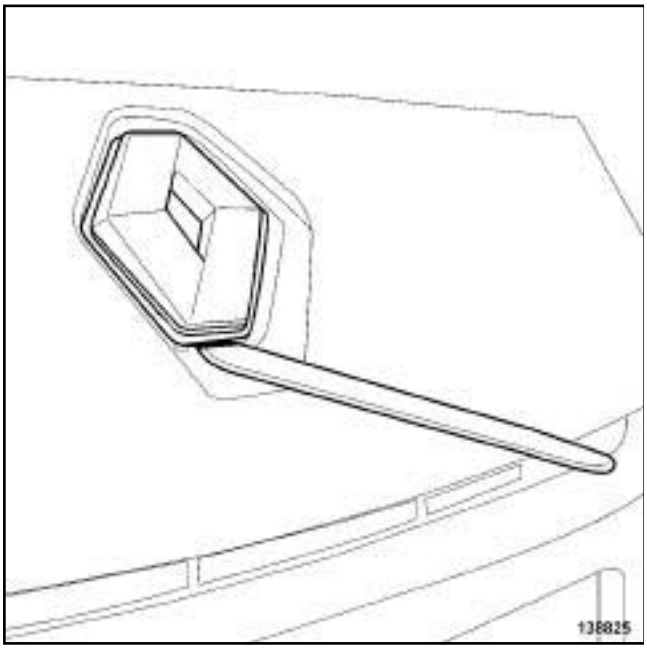

138825

❑ Unclip the manufacturer's badge using the tool **(Car. 1363)**.

REFITTING

I - REFITTING OPERATION FOR THE MANUFACTURER'S BADGE

❑ Clip on the manufacturer's badge.

II - REFITTING OPERATION FOR THE MANUFACTURER'S BADGE

❑ Clean the adhesive surface of the vehicle badge using a **LINT-FREE CLOTH** soaked in **HEPTANE** (see **Vehicle: Parts and ingredients for the repairwork**) (04B, Consumables - Products).

❑ Wipe the adhesive surface of the vehicle badge with a clean, dry **LINT-FREE CLOTH**.

B95 or D95

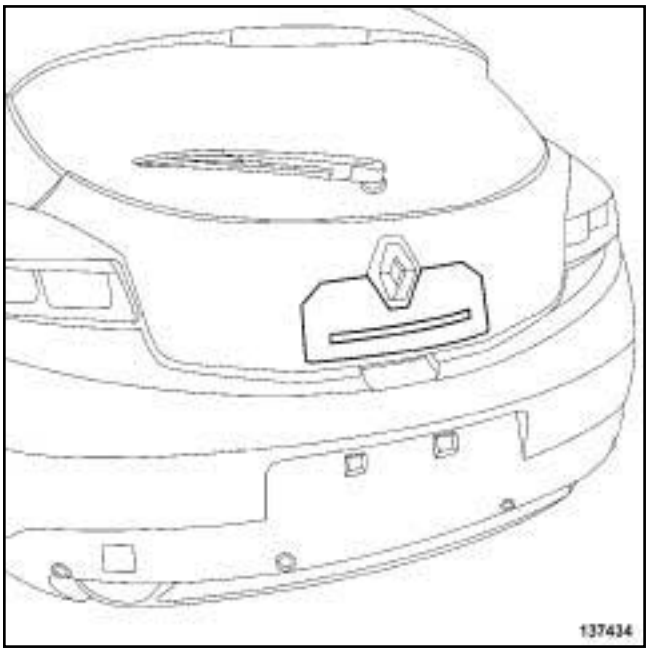

137434

❑ Position the template - badge unit.

❑ Remove the protective paper from the back of the vehicle badge.

❑ Stick on the vehicle badge.

❑ Remove the template.

J95

140299

- ❑ Position the template - badge unit.
- ❑ Remove the protective paper from the back of the vehicle badge.
- ❑ Stick on the vehicle badge.
- ❑ Remove the template.

K95

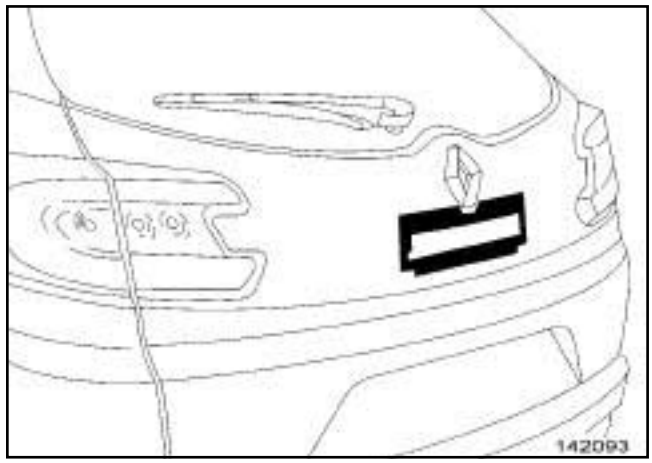

142093

- ❑ Position the template - badge unit.
- ❑ Remove the protective paper from the back of the vehicle badge.
- ❑ Stick on the vehicle badge.
- ❑ Remove the template.

B95 or D95

Tightening torques ▽	
the passenger airbag bolts on the cross member	**8 N.m**

REMOVAL

I - REMOVAL PREPARATION OPERATION

❑ Disconnect the battery (see **Battery: Removal - Refitting**) (80A, Battery).

❑ Remove:

- the windscreen pillar trims (see **A-pillar trim: Removal - Refitting**) (71A, Body internal trim),
- the centre console (see **57A**, **Interior equipment**, **Centre console: Removal - Refitting**, page **57A-29**) ,
- the driver's front airbag (see **Driver's front airbag: Removal - Refitting**) (88C, Airbags and pretensioners),
- the steering wheel (see **Steering wheel: Removal - Refitting**) (36A, Steering assembly),
- the steering column switch assembly (see **Steering wheel controls assembly: Removal - Refitting**) (84A, Controls - Signalling),
- the inhibitor switch (see **Inhibitor switch: Removal - Refitting**) (88C, Airbags and pretensioners),
- the dashboard lower trim (see **57A**, **Interior equipment**, **Lower section of dashboard trim: Removal - Refitting**, page **57A-10**) ,
- the glovebox (see **57A**, **Interior equipment**, **Glovebox: Removal - Refitting**, page **57A-25**) ,
- the centre front panel (see **57A**, **Interior equipment**, **Centre front panel: Removal - Refitting**, page **57A-20**) ,
- the card reader (see **Card reader: Removal - Refitting**) (82A, Immobiliser),
- the control panel (see **Control panel: Removal - Refitting**) (61A, Heating).

RADIO NO 01 or RADIO NO 02 or RADIO NO 03 or RADIO NO 04 or RADIO NO 05

❑ Remove:

- the radio (see **Car radio: Removal - Refitting**) (86A, Radio),
- the display (see **Display: Removal - Refitting**) (86A, Radio).

RADIO NO 06 or RADIO NO 07

❑ Remove:

- the radio navigation system (see **Radio navigation system: Removal - Refitting**) (83C, On-board telematics system),
- the navigation screen (see **Navigation screen: Removal - Refitting**) (83C, On-board telematics system).

❑ Remove:

- the instrument panel (see **Instrument panel: Removal - Refitting**) (83A, Instrument panel),
- the dashboard centre air vent (see **57A**, **Interior equipment**, **Dashboard air vent: Removal - Refitting**, page **57A-17**) ,
- the tweeters from the upper section of the dashboard (see **Tweeter: Removal - Refitting**) (86A, Radio).

RIGHT-HAND DRIVE

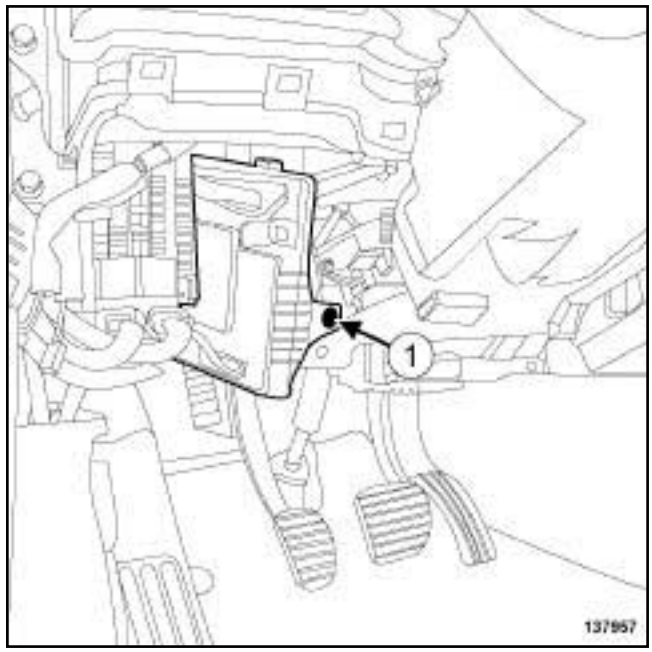

137957

❑ Remove the bolt (**1**) from the UCH.

B95 or D95

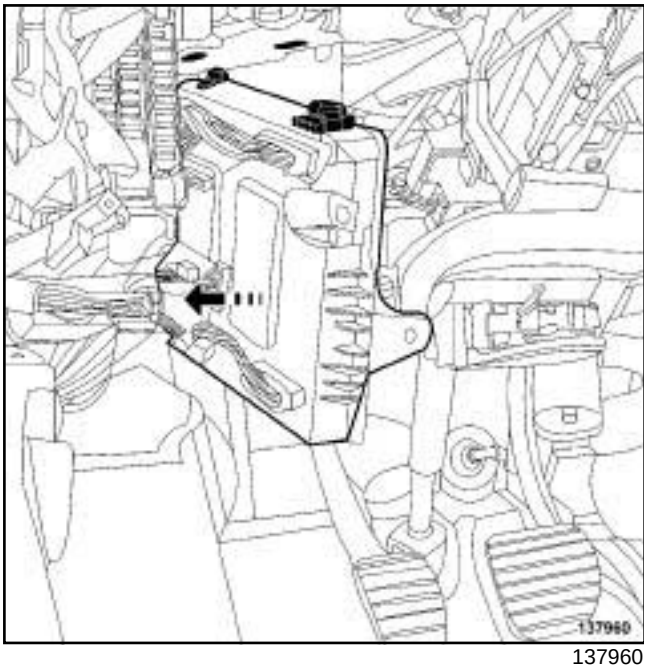

137960

❑ Move aside the UCH.

❑ Mark the routing of the dashboard wiring and the location of its mountings around the passenger front airbag unit.

WARNING

To prevent any risk of noise, premature wear, short circuits, etc. after the refitting operation, mark the wiring routing and how to connect the connectors.

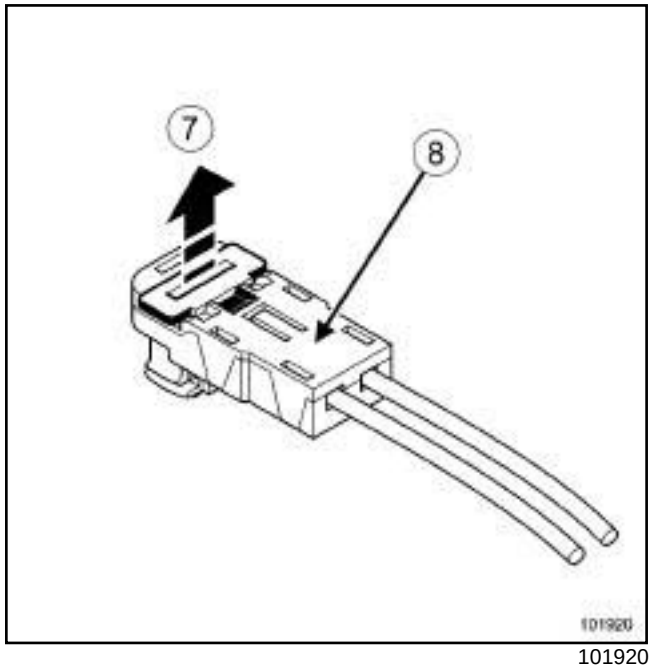

101920

❑ Unlock the passenger front airbag connectors (**8**) at (**7**) .

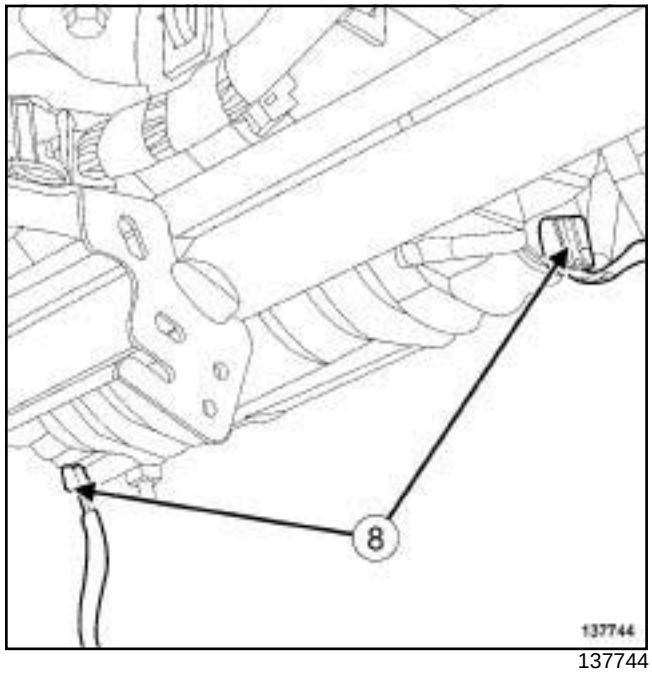

137744

❑ Disconnect the passenger front airbag connectors (**8**) .

B95 or D95

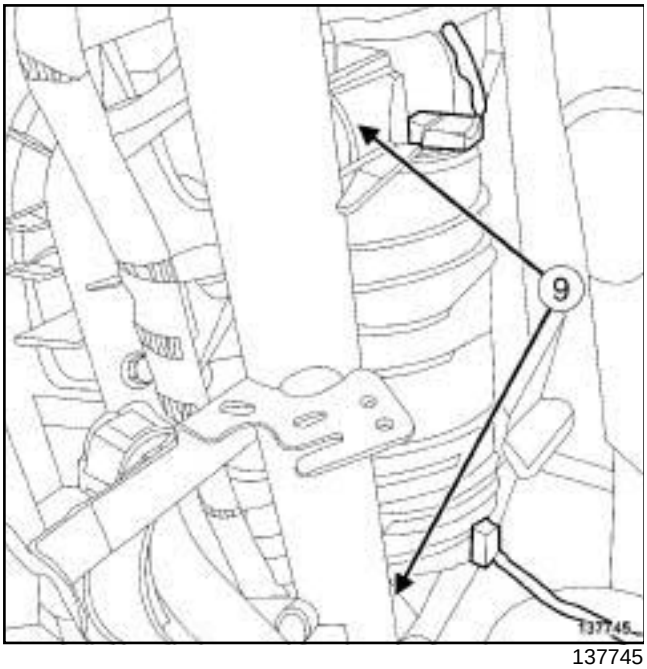

137745

❑ Remove the passenger airbag bolts (**9**) on the cross member.

B95 or D95

II - OPERATION FOR REMOVAL OF PART CONCERNED

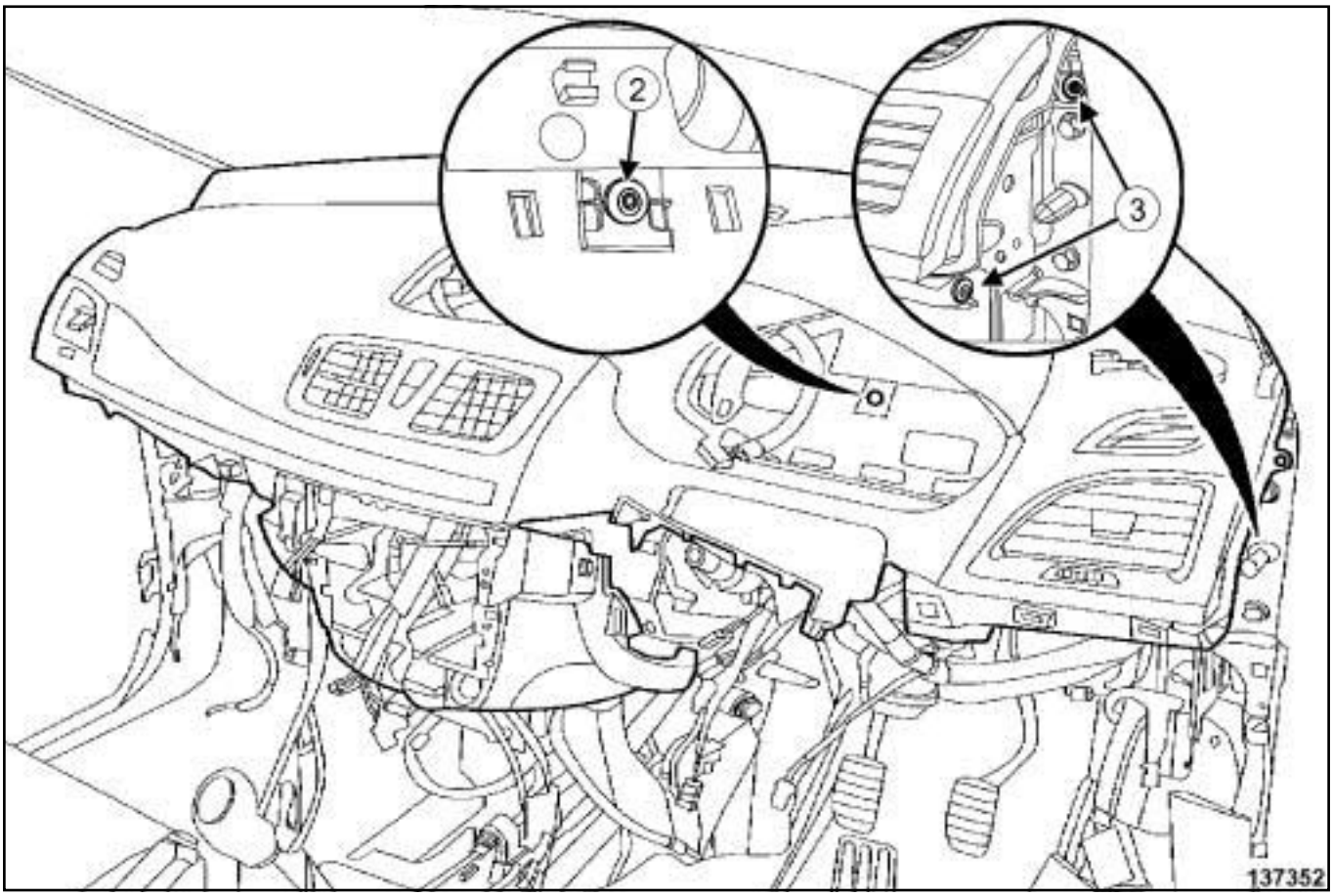

137352

B95 or D95

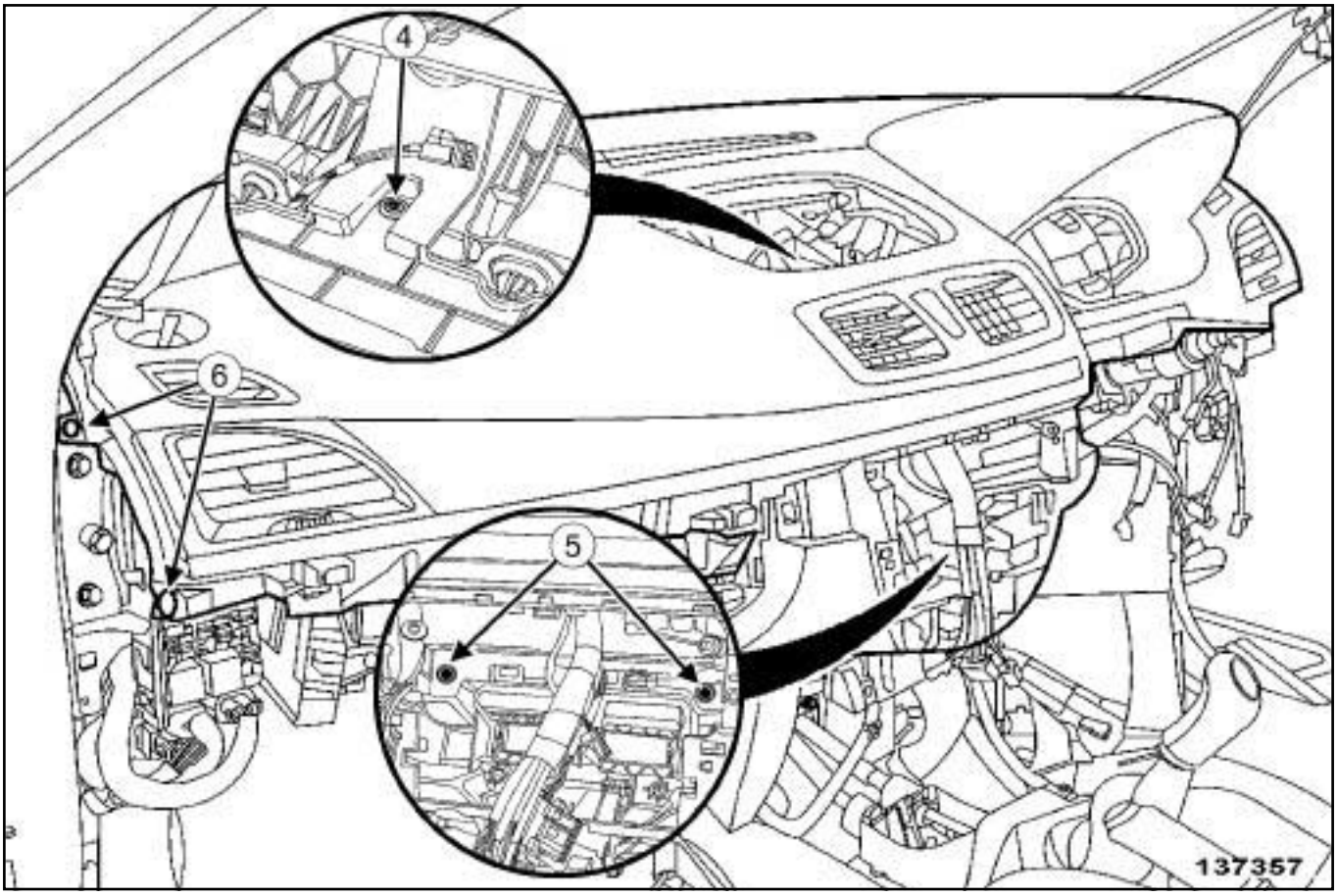

137357

- ❑ Remove the bolts (**2**) , (**3**) , (**4**) , (**5**) and (**6**) from the dashboard.
- ❑ Move the dashboard away slightly.

> Note:
>
> Mark the position of the various wiring before removing the dashboard.

- ❑ Remove the dashboard (this operation requires two people).

REFITTING

I - REFITTING OPERATION FOR PART CONCERNED

- ❑ Fit the dashboard (this operation requires two people).
- ❑ Refit the dashboard bolts.

II - FINAL OPERATION

- ❑ Refit the passenger airbag bolts on the cross member.
- ❑ Torque tighten **the passenger airbag bolts on the cross member (8 N.m)**.
- ❑ Connect the passenger front airbag connectors.
- ❑ Lock the passenger's front airbag connectors.
- ❑ Refit the wiring in the position marked during the removal operation.

> **WARNING**
>
> To prevent damage to the wiring harness when refitting, observe the original routing.

> **WARNING**
>
> To guarantee a good electrical connection, make sure that the wiring does not place any stress on the connectors or the surrounding components.

B95 or D95

RIGHT-HAND DRIVE

❏ Refit:

- the UCH,
- the UCH bolt ***(1)*** .

❏ Refit:

- the tweeters of the upper section of the dashboard (see **Tweeter: Removal - Refitting**) (86A, Radio),
- the dashboard centre air vent (see **57A**, **Interior equipment**, **Dashboard air vent: Removal - Refitting**, page **57A-17**) ,
- the instrument panel (see **Instrument panel: Removal - Refitting**) (83A, Instrument panel),

RADIO NO 06 or RADIO NO 07

❏ Refit:

- the navigation screen (see **Navigation screen: Removal - Refitting**) (83C, On-board telematics system),
- the radio navigation system (see **Radio navigation system: Removal - Refitting**) (83C, On-board telematics system).

RADIO NO 01 or RADIO NO 02 or RADIO NO 03 or RADIO NO 04 or RADIO NO 05

❏ Refit:

- the display (see **Display: Removal - Refitting**) (86A, Radio),
- the radio (see **Car radio: Removal - Refitting**) (86A, Radio).

❏ Refit:

- the control panel (see **Control panel: Removal - Refitting**) (61A, Heating),
- the card reader (see **Card reader: Removal - Refitting**) (82A, Immobiliser),
- the centre front panel (see **57A**, **Interior equipment**, **Centre front panel: Removal - Refitting**, page **57A-20**) ,
- the glovebox (see **57A**, **Interior equipment**, **Glovebox: Removal - Refitting**, page **57A-25**) ,
- the dashboard lower trim (see **57A**, **Interior equipment**, **Lower section of dashboard trim: Removal - Refitting**, page **57A-10**) ,
- the inhibitor switch (see **Inhibitor switch: Removal - Refitting**) (88C, Airbags and pretensioners),
- the steering column switch assembly (see **Steering wheel controls assembly: Removal - Refitting**) (84A, Controls - Signalling),
- the steering wheel (see **Steering wheel: Removal - Refitting**) (36A, Steering assembly),
- the driver's front airbag (see **Driver's front airbag: Removal - Refitting**) (88C, Airbags and pretensioners),
- the centre console (see **57A**, **Interior equipment**, **Centre console: Removal - Refitting**, page **57A-29**) ,
- the windscreen pillar trims (see **A-pillar trim: Removal - Refitting**) (71A, Body internal trim).

❏ Connect the battery (see **Battery : Removal - Refitting**) (80A, Battery).

❏ Carry out a function test on all functions.

J95

Tightening torques ▽	
passenger front airbag bolts on the cross member	**8 N.m**

REMOVAL

I - REMOVAL PREPARATION OPERATION

❑ Disconnect the battery (see **Battery: Removal - Refitting**) (80A, Battery).

RADIO NO 01 or RADIO NO 02 or RADIO NO 03 or RADIO NO 04 or RADIO NO 05

❑ Remove the radio (see **Car radio: Removal - Refitting**) (86A, Radio).

NAVIGATION AID 1 LEVEL or NAVIGATION AID 1 LEVEL

❑ Remove the radio navigation system (see **Radio navigation system: Removal - Refitting**) (83C, On-board telematics system).

❑ Remove:

- the ignition switch (see **Start button: Removal - Refitting**) (82A, Immobiliser),
- the dashboard trim pieces (see **57A**, **Interior equipment**, **Dashboard trim: Removal - Refitting**, page **57A-15**) ,
- the windscreen pillar trims (see **A-pillar trim: Removal - Refitting**) (71A, Body internal trim),
- the card reader (see **Card reader: Removal - Refitting**) (82A, Immobiliser),
- the centre console (see **57A**, **Interior equipment**, **Centre console: Removal - Refitting**, page **57A-29**) ,
- the driver's front airbag (see **Driver's front airbag: Removal - Refitting**) (88C, Airbags and pretensioners),
- the steering wheel (see **Steering wheel: Removal - Refitting**) (36A, Steering assembly),
- the steering column switch assembly (see **Steering wheel controls assembly: Removal - Refitting**) (84A, Controls - Signalling),
- the inhibitor switch (see **Inhibitor switch: Removal - Refitting**) (88C, Airbags and pretensioners),
- the dashboard lower trim (see **57A**, **Interior equipment**, **Lower section of dashboard trim: Removal - Refitting**, page **57A-10**) ,
- the glovebox (see **57A**, **Interior equipment**, **Glovebox: Removal - Refitting**, page **57A-25**) ,
- the centre front panel (see **57A**, **Interior equipment**, **Centre front panel: Removal - Refitting**, page **57A-20**) ,
- the control panel (see **Control panel: Removal - Refitting**) (61A, Heating),
- the instrument panel (see **Instrument panel: Removal - Refitting**) (83A, Instrument panel),
- the dashboard centre air vent (see **57A**, **Interior equipment**, **Dashboard air vent: Removal - Refitting**, page **57A-17**) ,
- the side air vents (see **57A**, **Interior equipment**, **Dashboard side air vent: Removal - Refitting**, page **57A-19**) ,
- the tweeters from the upper section of the dashboard (see **Tweeter: Removal - Refitting**) (86A, Radio).

II - OPERATION FOR REMOVAL OF PART CONCERNED

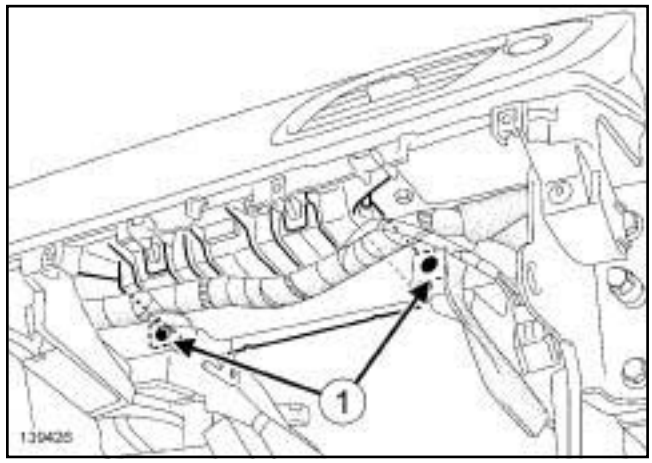

139426

❑ Remove the front passenger airbag bolts (**1**) .

J95

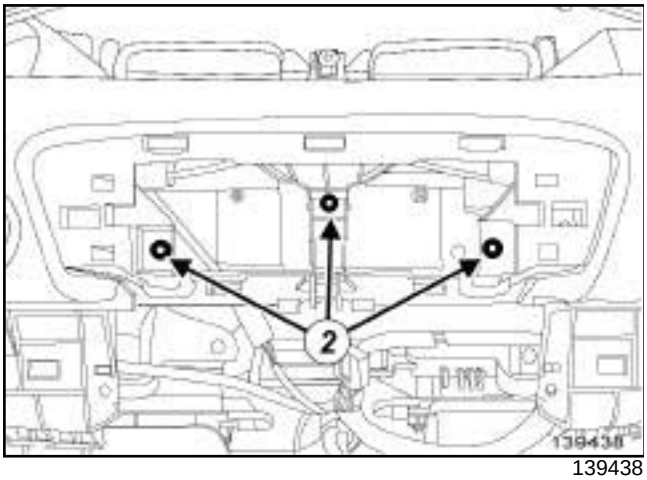

139438

❏ Remove the bolts (**2**) .

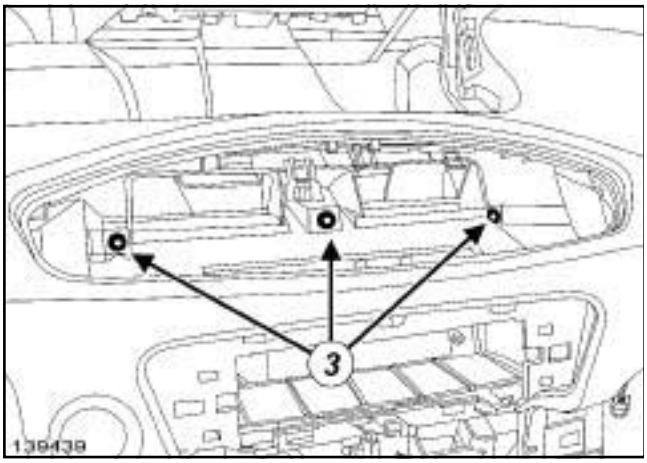

139439

❏ Remove the bolts (**3**) .

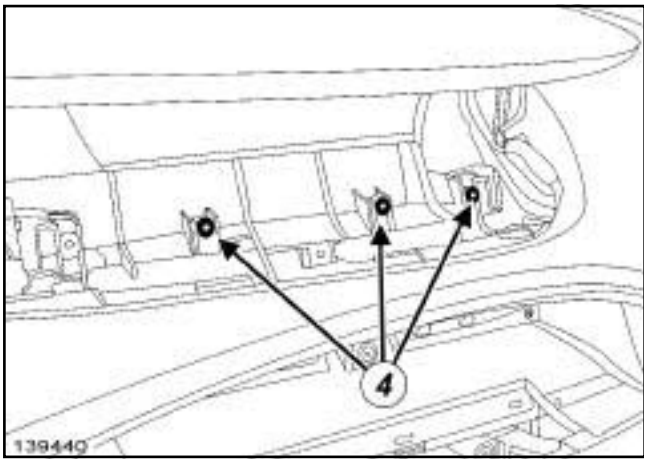

139440

❏ Remove the bolts (**4**) .

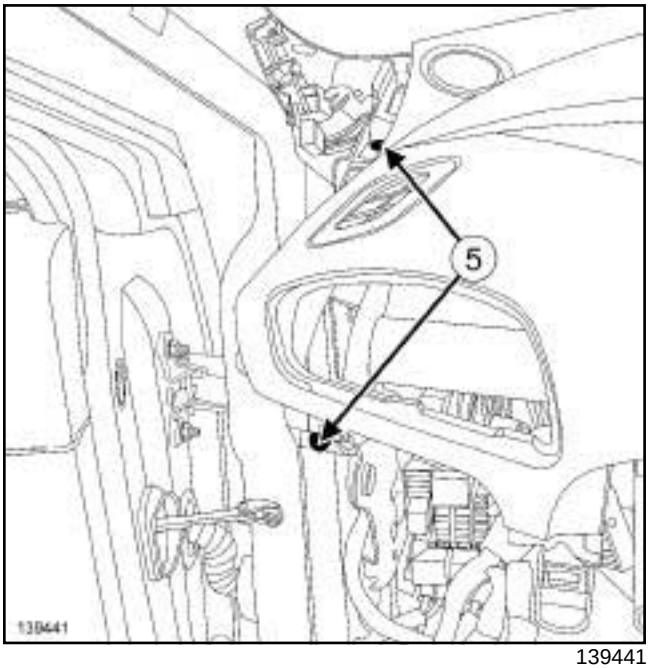

139441

❏ Remove the bolts (**5**) .

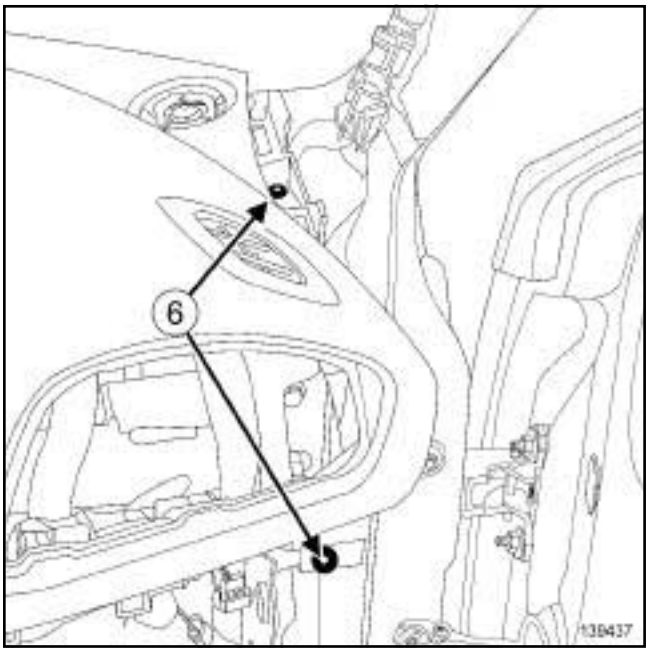

139437

❏ Remove the bolts (**6**) .

❏ Move the dashboard away slightly.

> Note:
>
> Mark the position of the various wiring before removing the dashboard.

❏ Unclip the wiring on the dashboard.

❏ Remove the dashboard (this operation requires two people).

J95

REFITTING

I - REFITTING OPERATION FOR PART CONCERNED

❑ Clip the wiring onto the dashboard.

❑ Fit the dashboard (this operation requires two people).

❑ Refit the dashboard bolts ***(1)*** , ***(2)*** , ***(3)*** , ***(4)*** , ***(5)*** , ***(6)*** .

❑ Torque tighten the **passenger front airbag bolts on the cross member (8 N.m)**.

II - FINAL OPERATION

❑ Refit:

- the tweeters of the upper section of the dashboard (see **Tweeter: Removal - Refitting**) (86A, Radio),
- the side air vents (see **57A**, **Interior equipment**, **Dashboard side air vent: Removal - Refitting**, page **57A-19**) ,
- the dashboard centre air vent (see **57A**, **Interior equipment**, **Dashboard air vent: Removal - Refitting**, page **57A-17**) ,
- the instrument panel (see **Instrument panel: Removal - Refitting**) (83A, Instrument panel),
- the control panel (see **Control panel: Removal - Refitting**) (61A, Heating),
- the centre front panel (see **57A**, **Interior equipment**, **Centre front panel: Removal - Refitting**, page **57A-20**) ,
- the glovebox (see **57A**, **Interior equipment**, **Glovebox: Removal - Refitting**, page **57A-25**) ,
- the dashboard lower trim (see **57A**, **Interior equipment**, **Lower section of dashboard trim: Removal - Refitting**, page **57A-10**) ,
- the inhibitor switch (see **Inhibitor switch: Removal - Refitting**) (88C, Airbags and pretensioners),
- the steering column switch assembly (see **Steering wheel controls assembly: Removal - Refitting**) (84A, Controls - Signalling),
- the steering wheel (see **Steering wheel: Removal - Refitting**) (36A, Steering assembly),
- the driver's front airbag (see **Driver's front airbag: Removal - Refitting**) (88C, Airbags and pretensioners),
- the centre console (see **57A**, **Interior equipment**, **Centre console: Removal - Refitting**, page **57A-29**) ,
- the card reader (see **Card reader: Removal - Refitting**) (82A, Immobiliser),
- the windscreen pillar trims (see **A-pillar trim: Removal - Refitting**) (71A, Body internal trim),
- the dashboard trim pieces (see **57A**, **Interior equipment**, **Dashboard trim: Removal - Refitting**, page **57A-15**) ,
- the ignition switch (see **Start button: Removal - Refitting**) (82A, Immobiliser).

NAVIGATION AID 1 LEVEL or NAVIGATION AID 1 LEVEL

❑ Refit the radio navigation system (see **Radio navigation system: Removal - Refitting**) (83C, On board telematics system).

RADIO NO 01 or RADIO NO 02 or RADIO NO 03 or RADIO NO 04 or RADIO NO 05

❑ Refit the radio (see **Car radio: Removal - Refitting**) (86A, Radio).

❑ Connect the battery (see **Battery: Removal - Refitting**) (80A, Battery).

B95 or D95

Essential special tooling	
Car. 1363	Set of trim removal levers.

REMOVAL

I - REMOVAL PREPARATION OPERATION

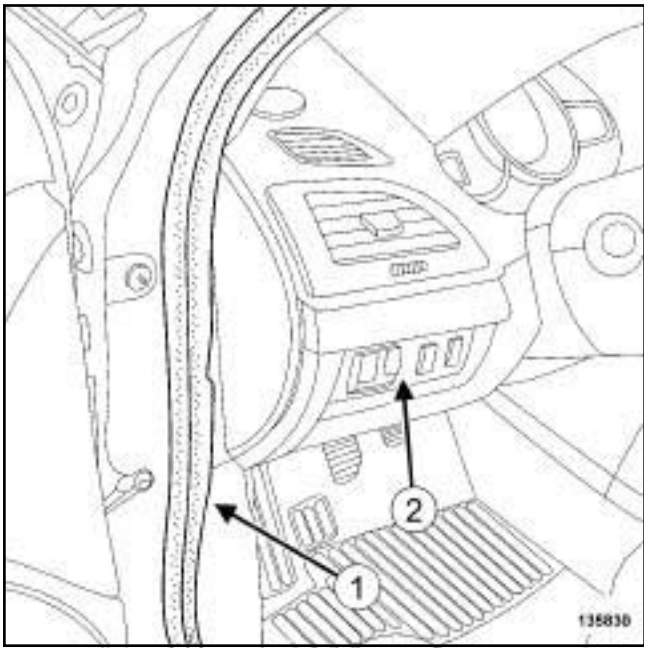

135830

❑ Unclip the switch plate (**2**) using the tool **(Car. 1363)**.

❑ Disconnect the switch plate connectors.

❑ Partially remove the driver's side door seal ***(1)*** .

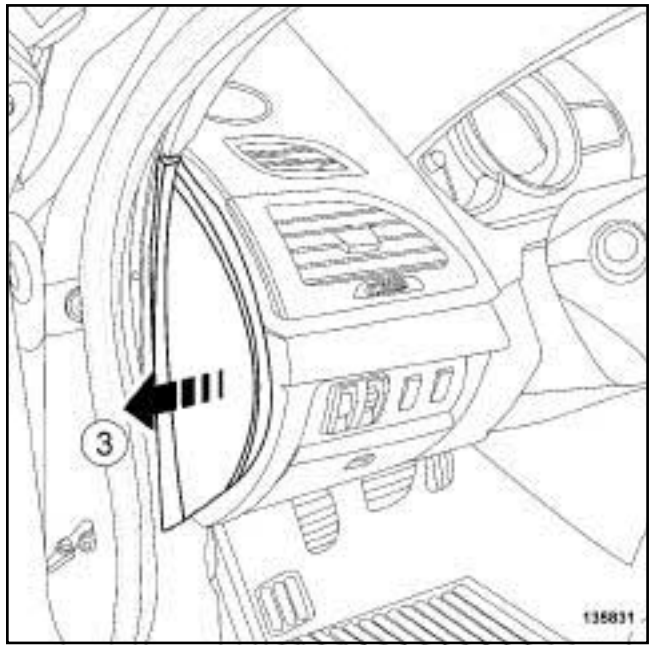

135831

❑ Unclip the dashboard side panel using **(Car. 1363)** (**3**) .

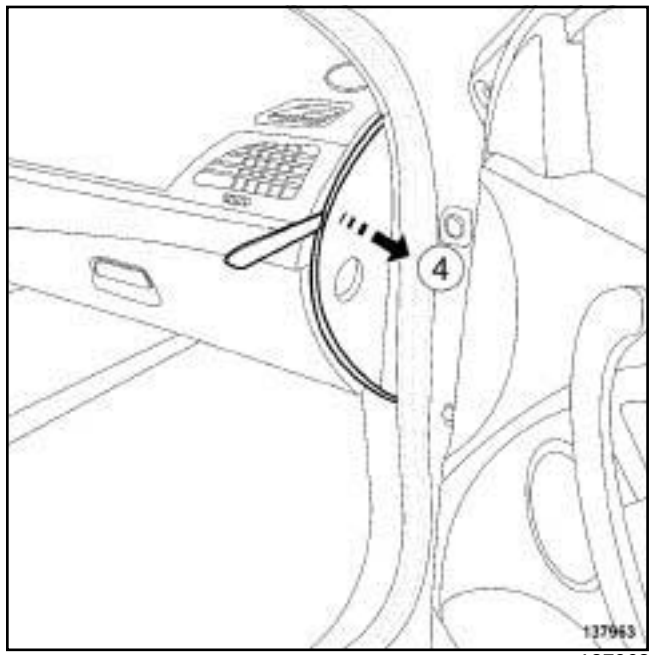

137963

❑ Unclip the dashboard side panel in accordance with the arrow (**4**) using the tool **(Car. 1363)**.

B95 or D95

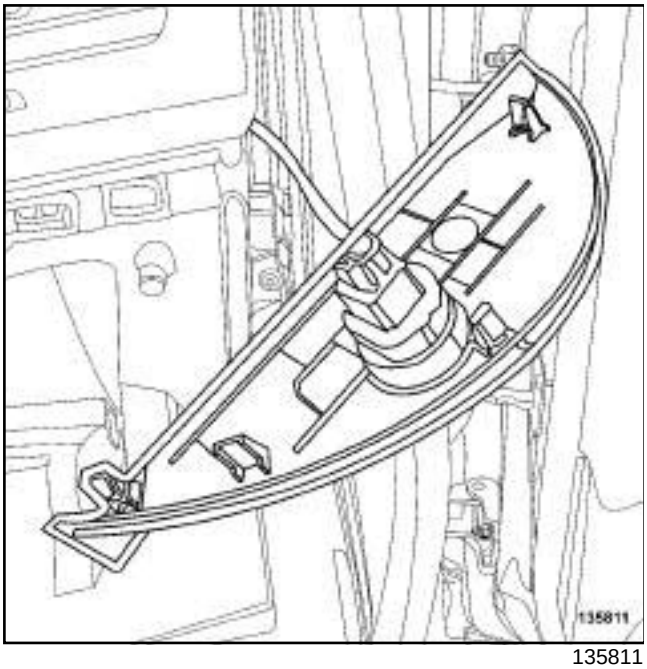

135811

❑ Disconnect inhibitor switch connector.

II - OPERATION FOR REMOVAL OF PART CONCERNED

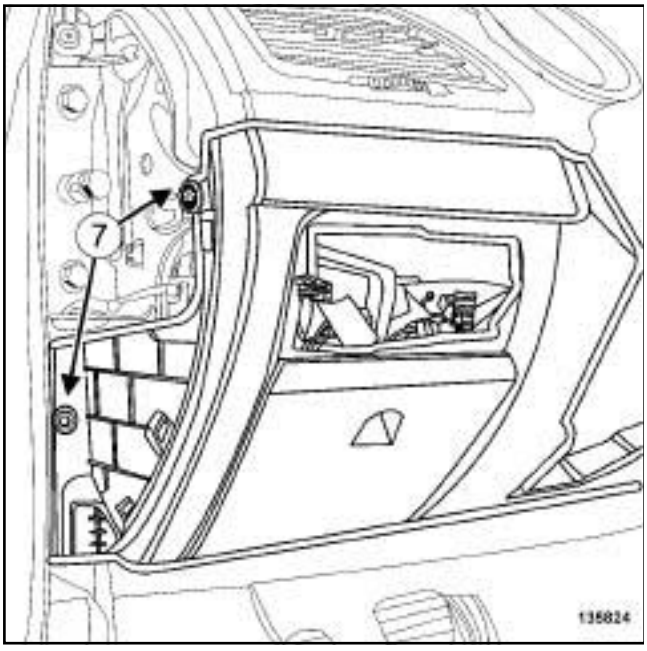

135824

❑ Remove the bolts (**7**) from the dashboard lower trim.

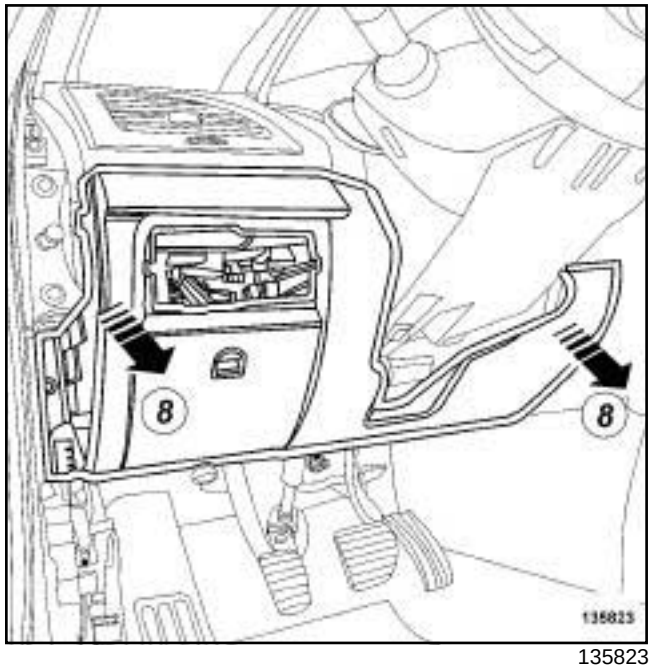

135823

❑ Unclip the dashboard lower trim in accordance with the arrow (**8**) .

B95 or D95

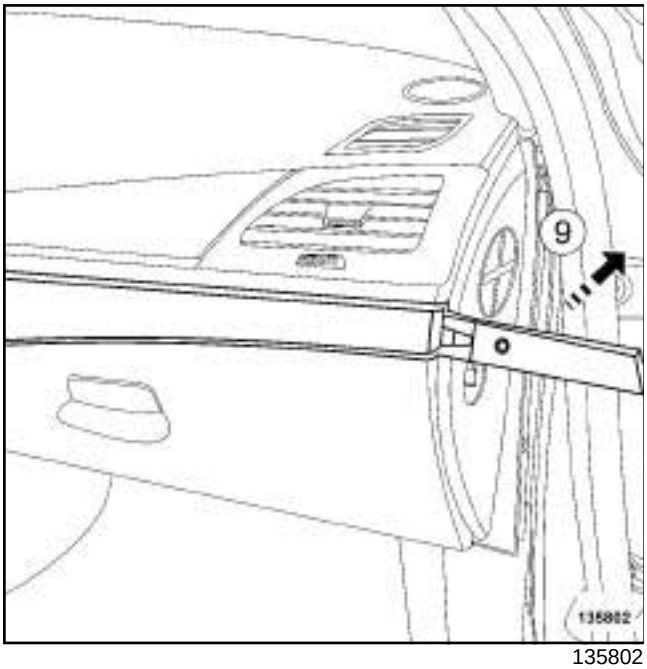

135802

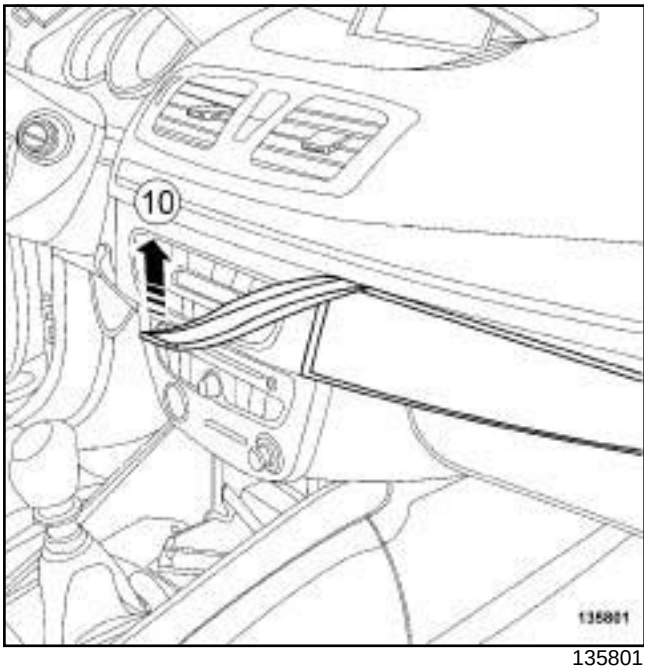

135801

❑ Unclip the dashboard lower trim on the passenger side at (**9**) and at (**10**) using the tool **(Car. 1363)**.

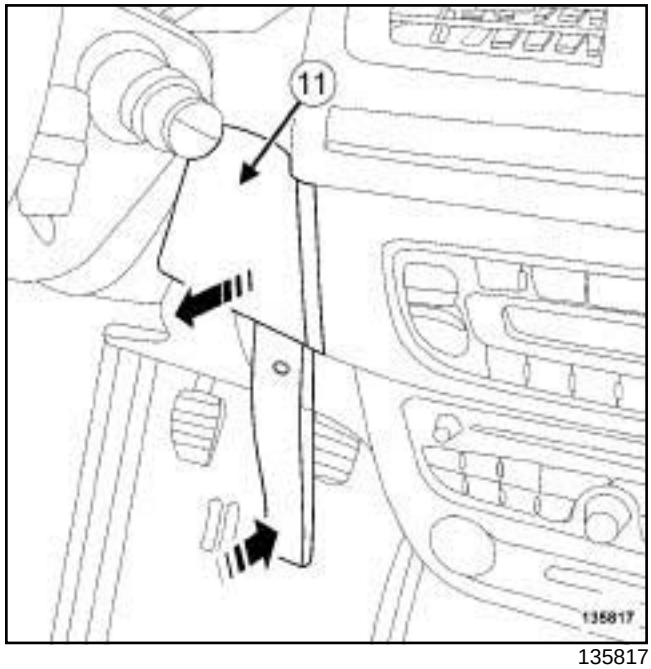

135817

❑ Unclip the dashboard lower trim on the driver's side (**11**) using the tool **(Car. 1363)**.

REFITTING

I - REFITTING OPERATION FOR PART CONCERNED

❑ Clip on the dashboard lower trim ***(8)*** .

❑ Refit the bolts ***(7)*** on the dashboard lower trim.

❑ Clip:

- the dashboard lower trim on the passenger side,
- the dashboard lower trim ***(11)*** on the driver's side.

II - FINAL OPERATION

❑ Connect the inhibitor switch connector.

❑ Clip on the dashboard side faces.

❑ Refit the driver's side door seal ***(1)*** .

❑ Connect the switch plate connectors.

❑ Clip the switch plate ***(2)*** onto the dashboard lower trim.

J95

Essential special tooling	
Car. 1363	Set of trim removal levers.

REMOVAL

I - REMOVAL PREPARATION OPERATION

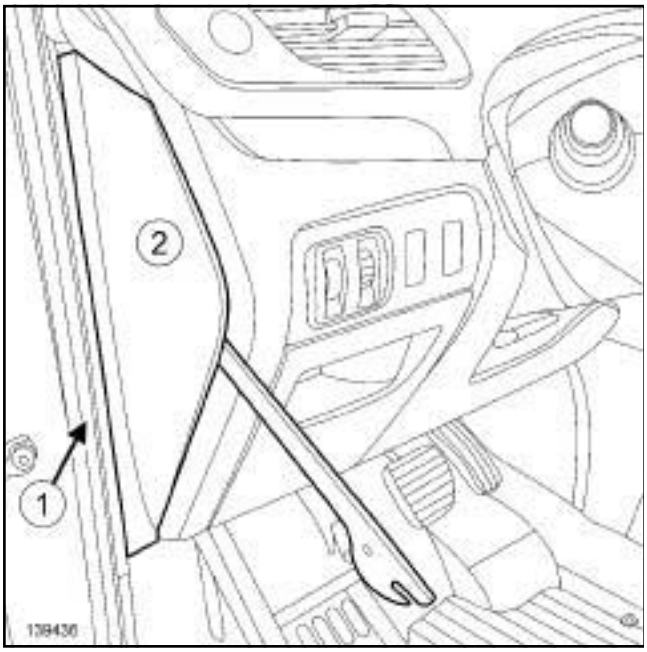

139436

❑ Partially remove the front side door seal (**1**) .

❑ Unclip the side panel (**2**) using the tool **(Car. 1363)**.

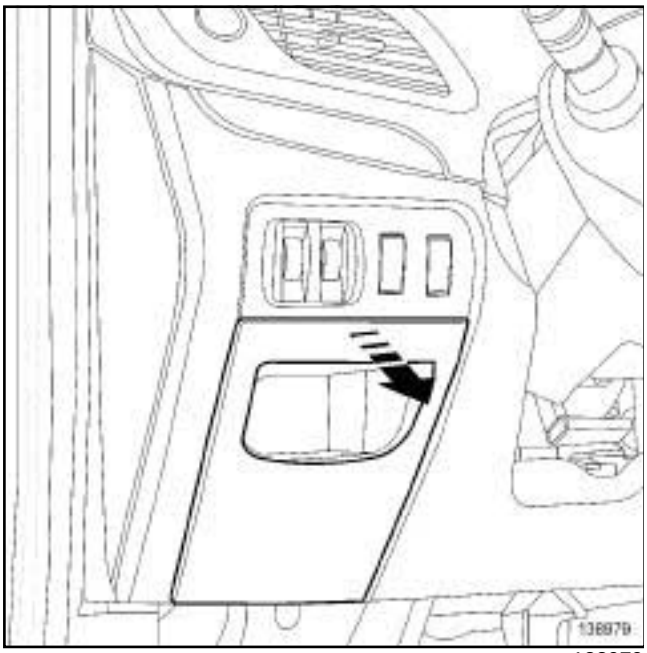

138979

❑ Unclip the access flap to the passenger compartment fuse and relay box using the tool **(Car. 1363)**.

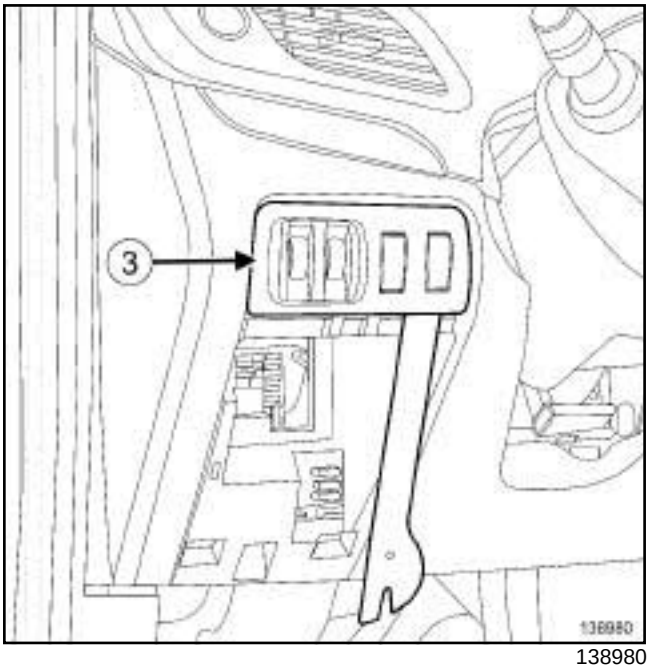

138980

❑ Unclip the switch plate (**3**) using the tool **(Car. 1363)**.

❑ Disconnect the switch plate connectors.

❑ Remove the dashboard trim on the driver's side (see **57A**, **Interior equipment**, **Dashboard trim: Removal - Refitting**, page **57A-15**) .

II - OPERATION FOR REMOVAL OF PART CONCERNED

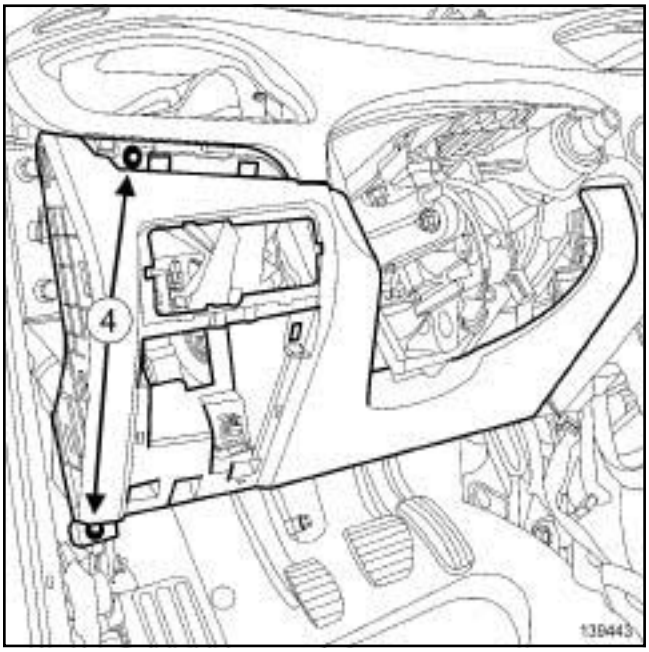

139443

❑ Remove the bolts (**4**) from the dashboard lower trim.

J95

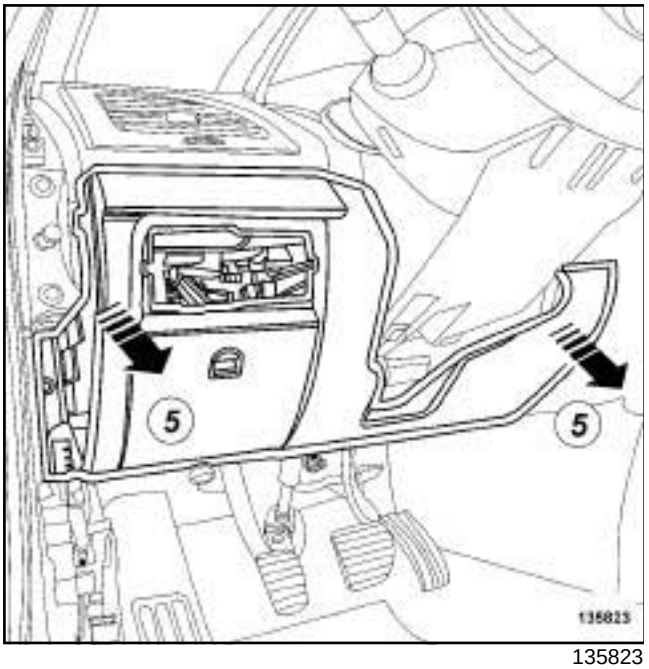

135823

❑ Unclip the dashboard lower trim at (**5**) .

REFITTING

I - REFITTING OPERATION FOR PART CONCERNED

❑ Clip on the dashboard lower trim.

❑ Refit the bolts ***(4)*** from the dashboard lower trim.

II - FINAL OPERATION

❑ Refit the dashboard trim on the driver's side (see **57A**, **Interior equipment**, **Dashboard trim: Removal - Refitting**, page **57A-15**) .

❑ Connect the switch plate connectors.

❑ Clip:

- the switch plate ***(3)*** ,
- the passenger compartment fuse and relay box access flap,
- the side panel ***(2)*** .

❑ Refit the seal ***(1)*** of the front side door.

J95

Essential special tooling	
Car. 1363	Set of trim removal levers.

REMOVAL

OPERATION FOR REMOVAL OF PART CONCERNED

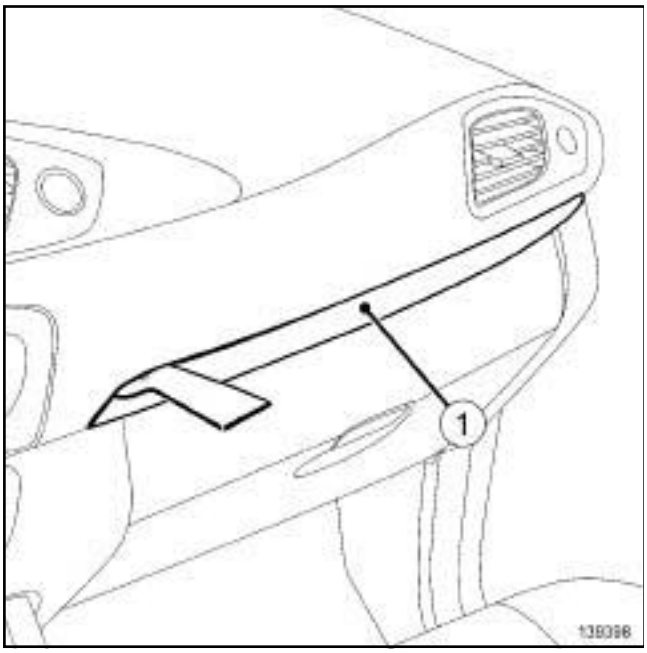

139398

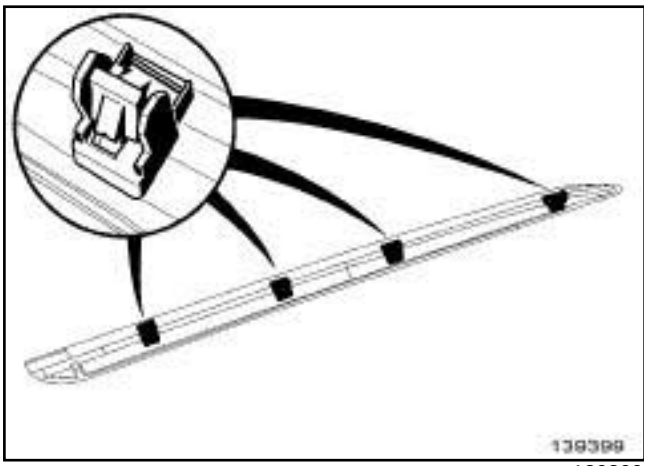

139399

❑ Remove the passenger side dashboard trim (**1**) using the tool **(Car. 1363)**.

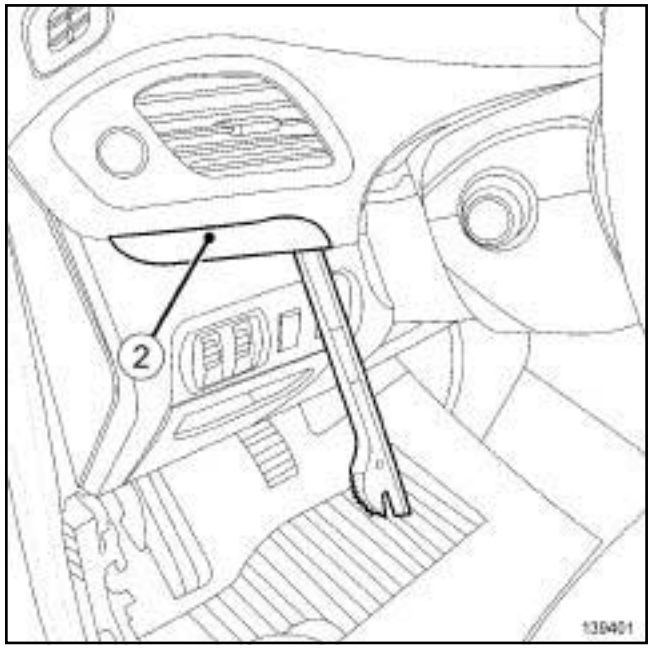

139401

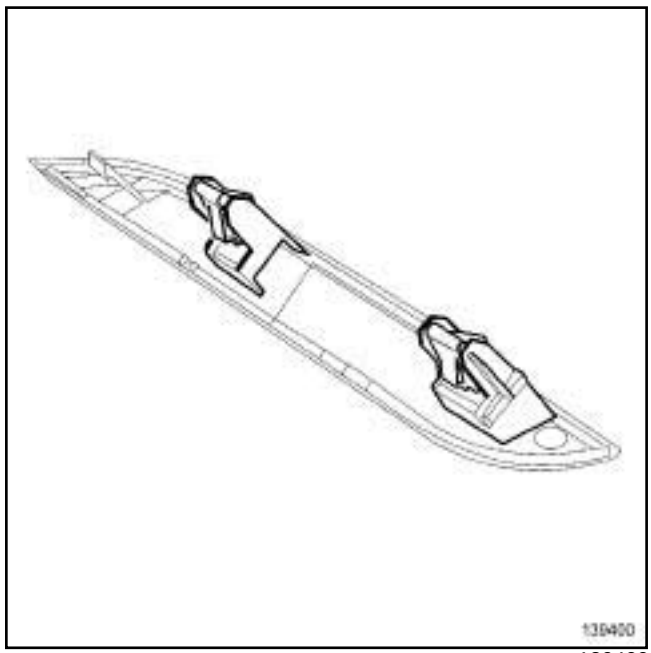

139400

❑ Remove the driver's side dashboard trim (**2**) using the tool **(Car. 1363)**.

REFITTING

REFITTING OPERATION FOR PART CONCERNED

❑ Clip the dashboard trim pieces in place.

B95 or D95

Essential special tooling	
Car. 1363	Set of trim removal levers.

REMOVAL

I - REMOVAL PREPARATION OPERATION

❑ Remove the glovebox (see **57A**, **Interior equipment**, **Glovebox: Removal - Refitting**, page **57A-25**) .

II - OPERATION FOR REMOVAL OF PART CONCERNED

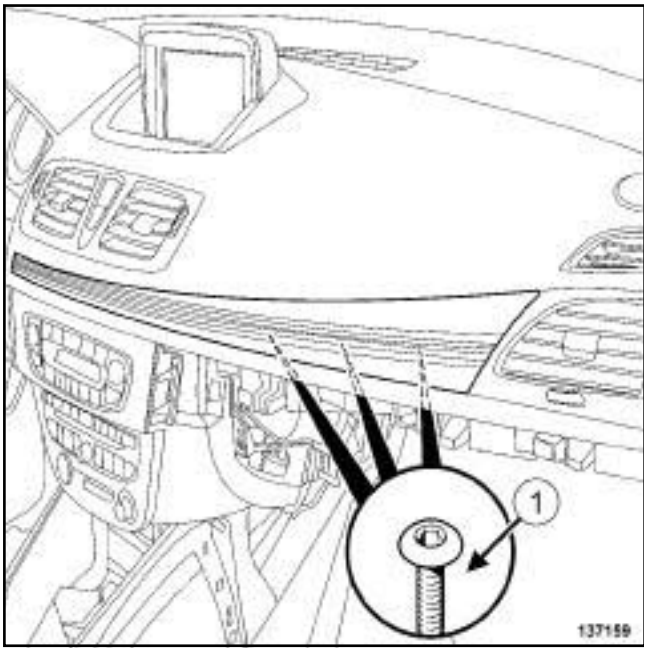

137159

❑ Remove the dashboard trim bolts (**1**) .

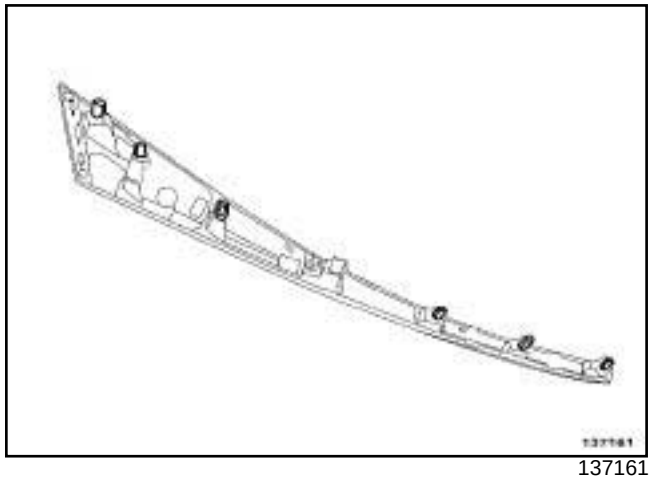

137161

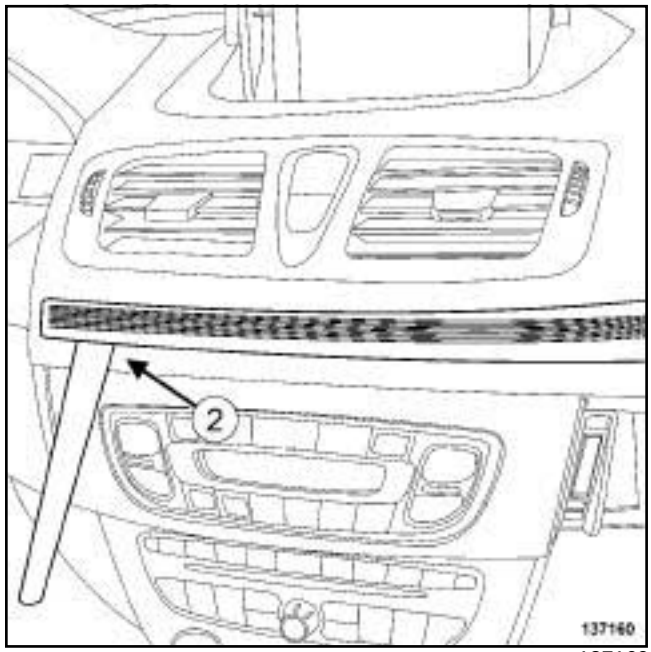

137160

❑ Unclip the dashboard trim using the tool **(Car. 1363)** at (**2**) .

I - REFITTING OPERATION FOR PART CONCERNED

❑ Clip on the dashboard trim piece.

❑ Refit the dashboard trim bolts.

II - FINAL OPERATION

❑ Refit the glovebox (see **57A**, **Interior equipment**, **Glovebox: Removal - Refitting**, page **57A-25**) .

B95 or D95

Essential special tooling	
Car. 1363	Set of trim removal levers.

REMOVAL

I - REMOVAL PREPARATION OPERATION

Side air vent on the passenger side

❑ Remove:

- the glovebox (see **57A**, **Interior equipment**, **Glovebox: Removal - Refitting**, page **57A-25**) ,
- the dashboard trim piece (see **57A**, **Interior equipment**, **Dashboard trim: Removal - Refitting**, page **57A-15**) .

II - OPERATION FOR REMOVAL OF PART CONCERNED

Side air vent on the driver's side

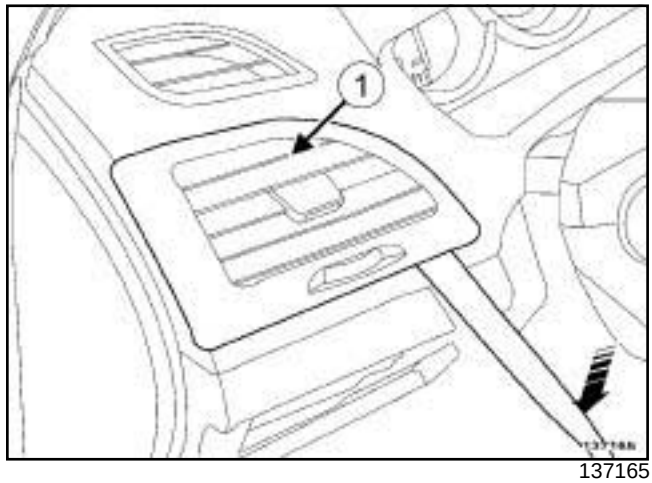

137165

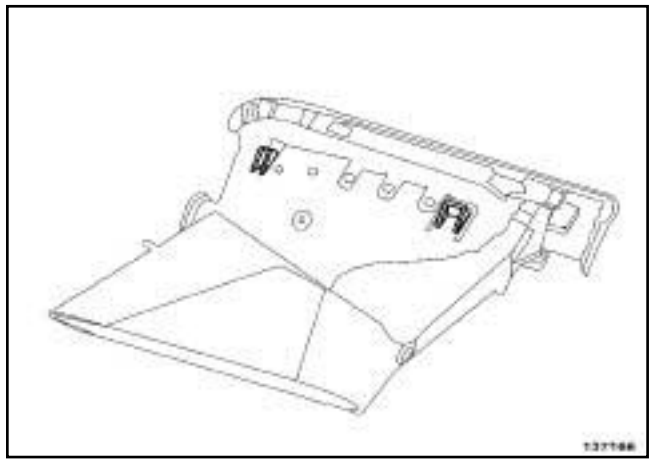

137166

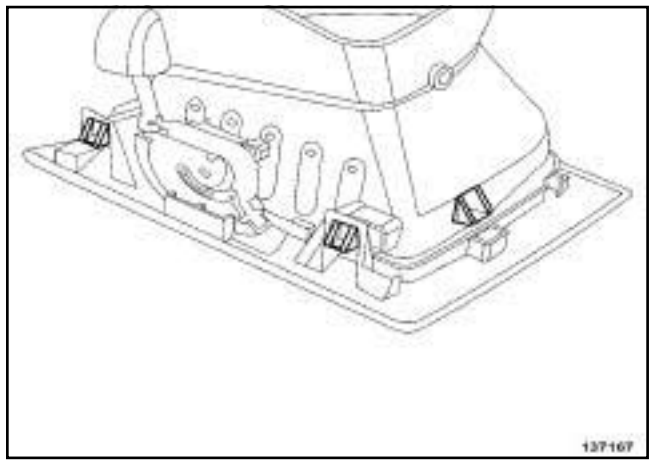

137167

❑ Unclip the side air vent (**1**) from the dashboard using the tool **(Car. 1363)**.

B95 or D95

Centre air vent

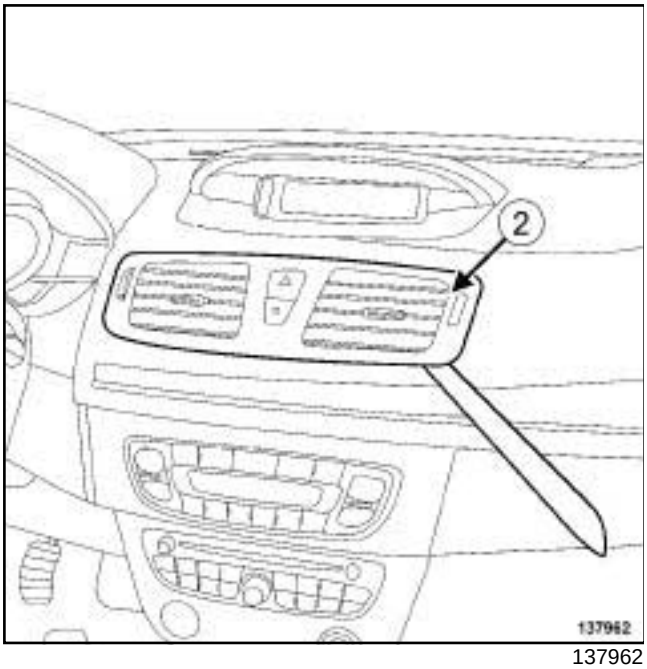

137962

❑ Unclip the centre air vent (**2**) from the dashboard using the tool **(Car. 1363)**.

❑ Disconnect the hazard warning lights and central door locking switch connector.

Side air vent on the passenger side

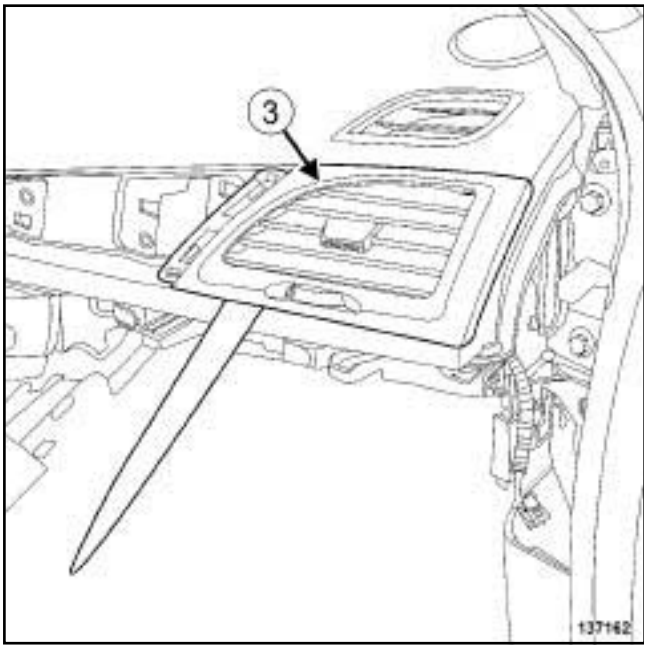

137162

❑ Unclip the side air vent (**3**) from the dashboard using the tool **(Car. 1363)**.

REFITTING

I - REFITTING OPERATION FOR PART CONCERNED

1 - Centre air vent

❑ Connect the hazard warning lights and central door locking switch connectors.

2 - Side air vents

❑ Clip the side air vents in place.

II - FINAL OPERATION

Side air vent on the passenger side

❑ Refit:

- the dashboard trim piece (see **57A**, **Interior equipment**, **Dashboard trim: Removal - Refitting**, page **57A-15**) ,
- the glovebox (see **57A**, **Interior equipment**, **Glovebox: Removal - Refitting**, page **57A-25**) .

Essential special tooling	
Car. 1363	Set of trim removal levers.

REMOVAL

OPERATION FOR REMOVAL OF PART CONCERNED

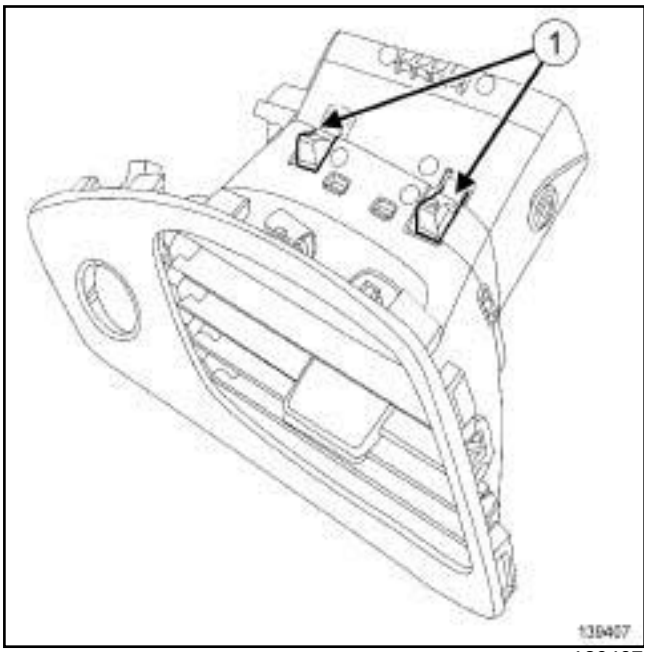

139407

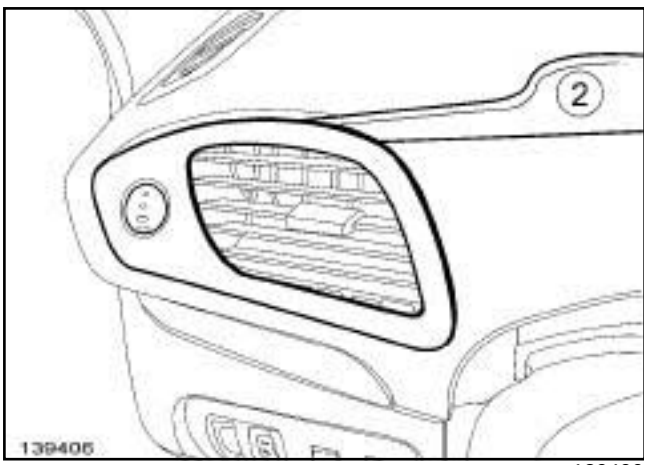

139406

❑ Remove the dashboard side air vent using the tool **(Car. 1363)** (**2**) while pressing on the clips (**1**) .

REFITTING

REFITTING OPERATION FOR PART CONCERNED

❑ Clip the side air vent back onto the dashboard.

B95 or D95

Essential special tooling	
Car. 1363	Set of trim removal levers.

REMOVAL

I - REMOVAL PREPARATION OPERATION

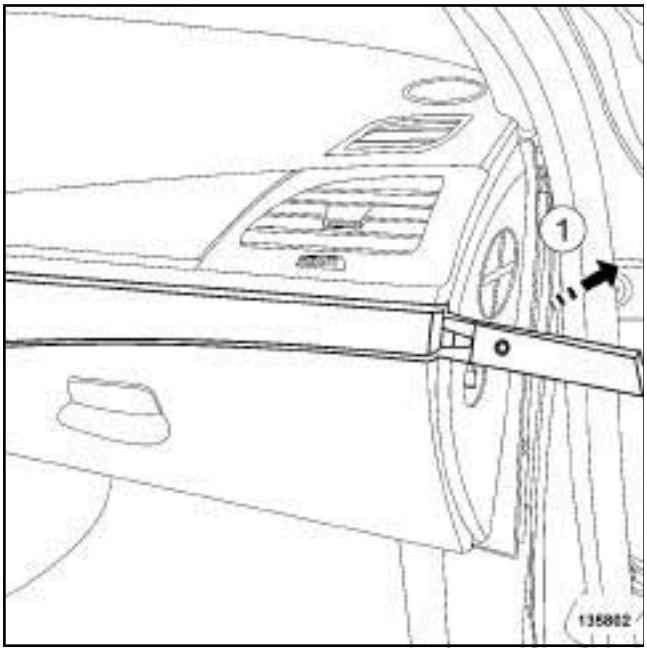

135802

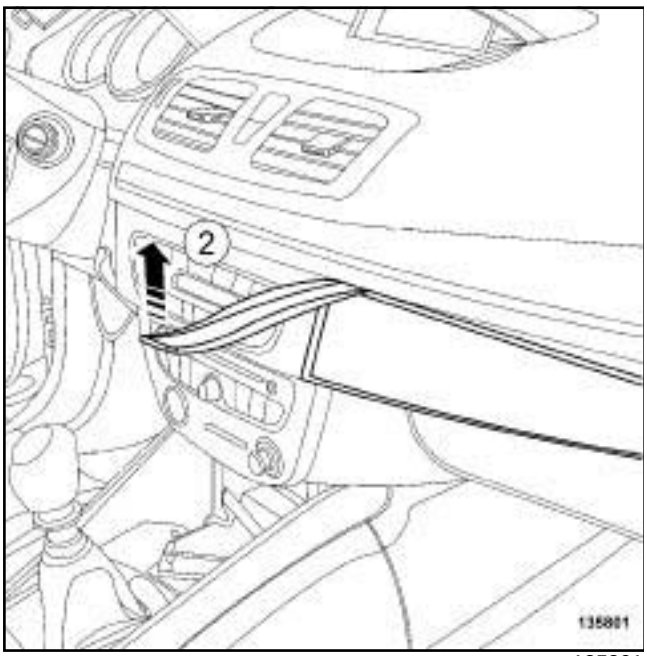

135801

❑ Unclip the dashboard lower trim on the passenger side at (**1**) and at (**2**) using the tool **(Car. 1363)**.

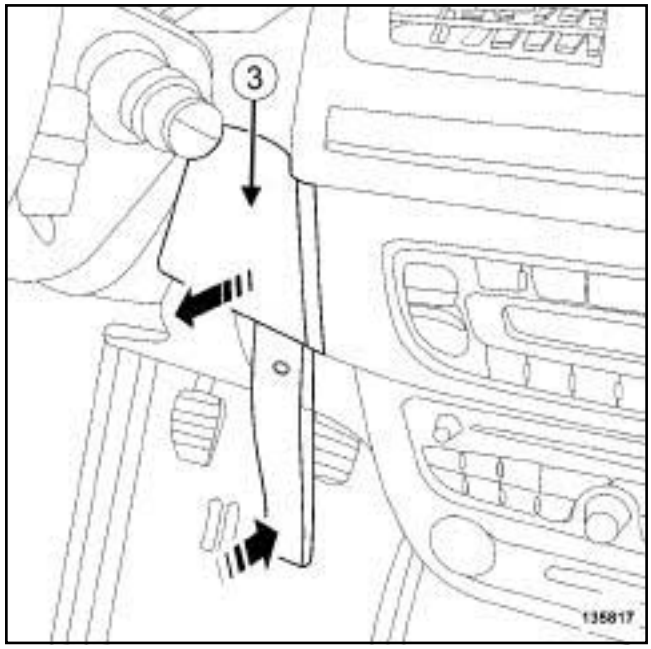

135817

❑ Unclip the dashboard lower trim on the driver's side (**3**) using the tool **(Car. 1363)**.

B95 or D95

II - OPERATION FOR REMOVAL OF PART CONCERNED

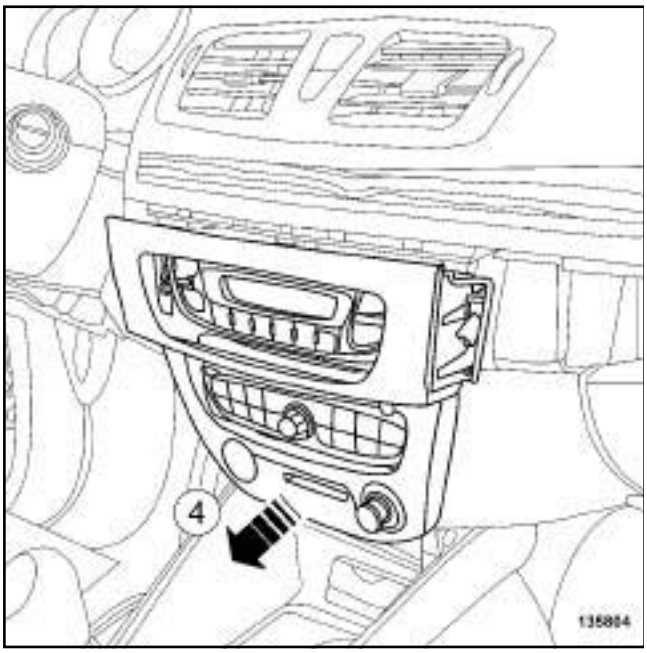

135804

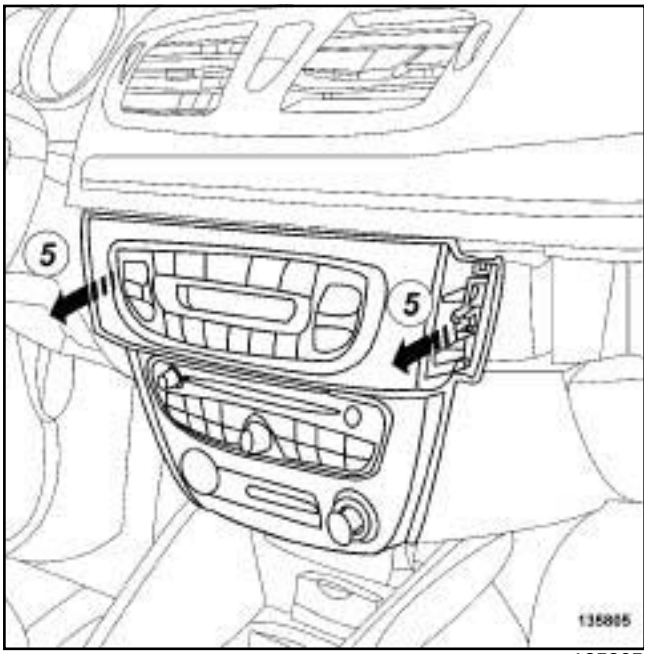

135805

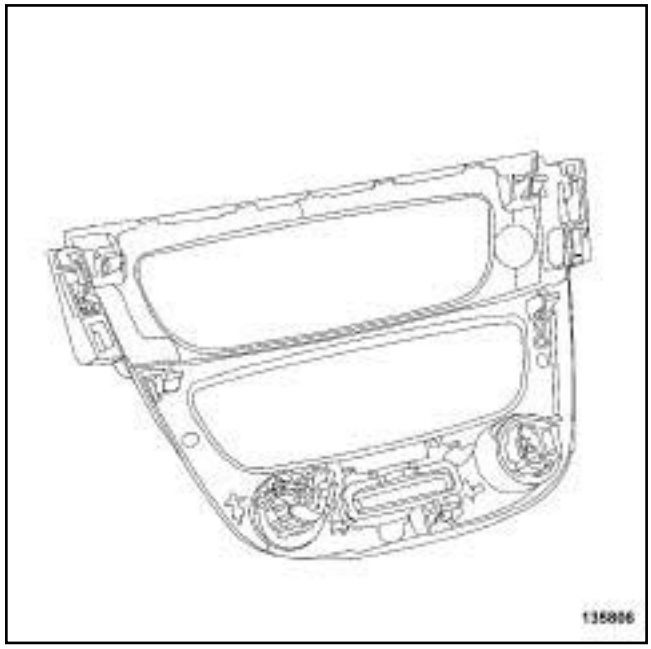

135806

❑ Unclip the centre front panel at (**4**) and at (**5**) using the tool **(Car. 1363)**.

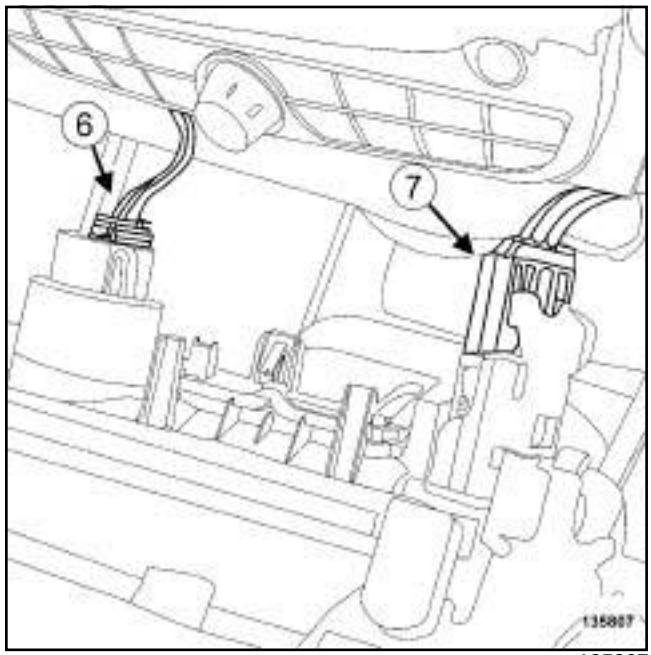

135807

❑ Disconnect:

- the start button connector (**6**) ,
- the cigarette lighter connector (**7**) .

B95 or D95

REFITTING

I - REFITTING OPERATION FOR PART CONCERNED

❏ Connect:

- the cigarette lighter connector,
- the start button connector.

❏ Clip in the centre front panel.

II - FINAL OPERATION

❏ Clip:

- the dashboard lower trim on the passenger side,
- the dashboard lower trim on the driver's side ***(3)*** .

J95

REMOVAL

I - REMOVAL PREPARATION OPERATION

❑ Disconnect the battery (see **Battery: Removal - Refitting**) (80A, Battery).

❑ Remove:

- the dashboard trim pieces (see **57A**, **Interior equipment**, **Dashboard trim: Removal - Refitting**, page **57A-15**) ,
- the dashboard lower trim (see **57A**, **Interior equipment**, **Lower section of dashboard trim: Removal - Refitting**, page **57A-10**) ,
- the inhibitor switch (see **Inhibitor switch: Removal - Refitting**) (88C, Airbags and pretensioners).
- the glovebox light (see **Glovebox light: Removal - Refitting**) (81B, Interior lighting),
- the glovebox (see **57A**, **Interior equipment**, **Glovebox: Removal - Refitting**, page **57A-25**) ,
- the centre console (see **57A**, **Interior equipment**, **Centre console: Removal - Refitting**, page **57A-29**) ,
- the control panel (see **Control panel: Removal - Refitting**) (61A, Heating).

RADIO NO 01 or RADIO NO 02 or RADIO NO 03 or RADIO NO 04 or RADIO NO 05

❑ Remove the radio (see **Car radio: Removal - Refitting**) (86A, Radio).

NAVIGATION AID 1 LEVEL or NAVIGATION AID 1 LEVEL

❑ Remove the radio navigation system (see **Radio navigation system: Removal - Refitting**) (83C, On-board telematics system).

II - OPERATION FOR REMOVAL OF PART CONCERNED

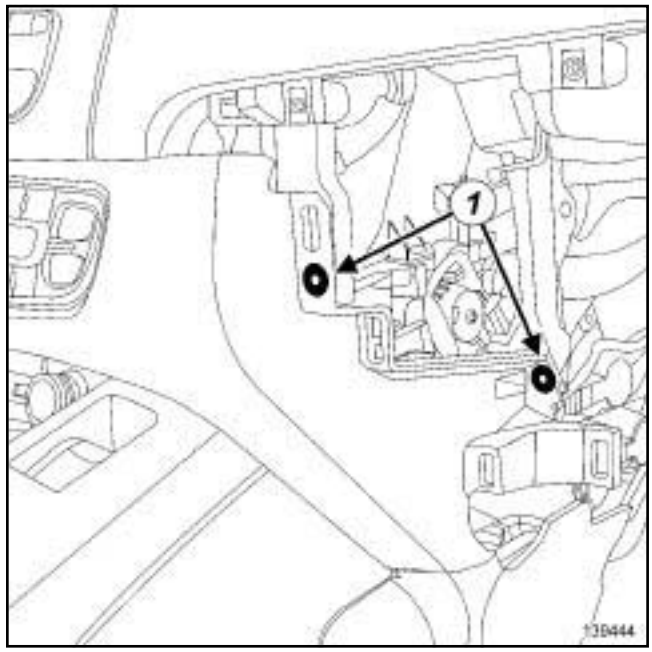

139444

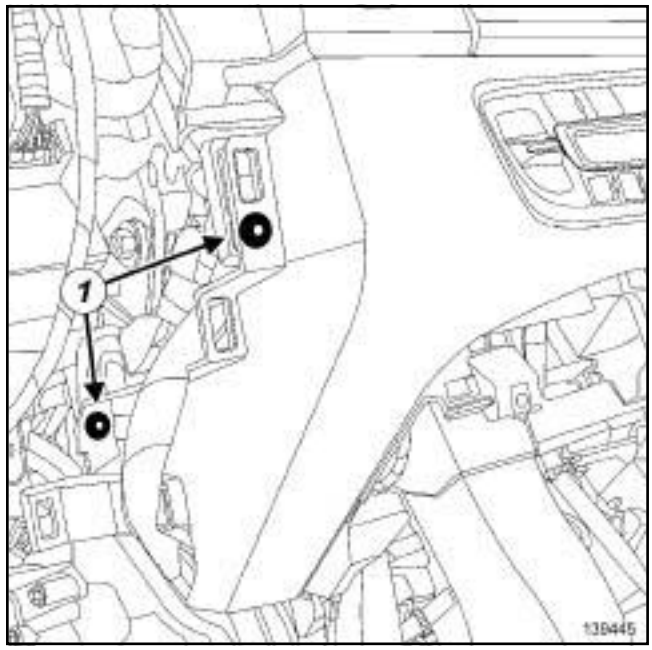

139445

❑ Remove:

- the bolts (**1**) ,
- the centre front panel with care.

Note:

Mark the position of the various wiring before removing the centre front panel.

J95

REFITTING

I - REFITTING OPERATION FOR PART CONCERNED

❑ Refit:

- the centre front panel with care,
- the bolts ***(1)*** .

II - FINAL OPERATION

RADIO NO 01 or RADIO NO 02 or RADIO NO 03 or RADIO NO 04 or RADIO NO 05

❑ Refit the radio (see **Car radio: Removal - Refitting**) (86A, Radio).

NAVIGATION AID 1 LEVEL or NAVIGATION AID 1 LEVEL

❑ Refit the radio navigation system (see **Radio navigation system: Removal - Refitting**) (83C, On-board telematics system).

❑ Refit:

- the control panel (see **Control panel: Removal - Refitting**) (61A, Heating),
- the centre console (see **57A**, **Interior equipment**, **Centre console: Removal - Refitting**, page **57A-29**) ,
- the glovebox (see **57A**, **Interior equipment**, **Glovebox: Removal - Refitting**, page **57A-25**) ,
- the glovebox light (see **Glovebox light: Removal - Refitting**) (81B, Interior lighting),
- the inhibitor switch (see **Inhibitor switch: Removal - Refitting**) (88C, Airbags and pretensioners),
- the dashboard lower trim (see **57A**, **Interior equipment**, **Lower section of dashboard trim: Removal - Refitting**, page **57A-10**) ,
- the dashboard trim pieces (see **57A**, **Interior equipment**, **Dashboard trim: Removal - Refitting**, page **57A-15**) .

❑ Connect the battery (see **Battery: Removal - Refitting**) (80A, Battery).

Essential special tooling	
Car. 1363	Set of trim removal levers.

REMOVAL

I - REMOVAL PREPARATION OPERATION

❑ Remove:

- the passenger side dashboard trim (see **57A**, **Interior equipment**, **Dashboard trim: Removal - Refitting**, page **57A-15**) ,
- the storage compartment light (see **Glovebox light: Removal - Refitting**) (81B, Interior lighting),
- the front side door seal partially.

LEFT-HAND DRIVE

❑ Remove the inhibitor switch (see **Inhibitor switch: Removal - Refitting**) (88C, Airbags and pretensioners).

RIGHT-HAND DRIVE

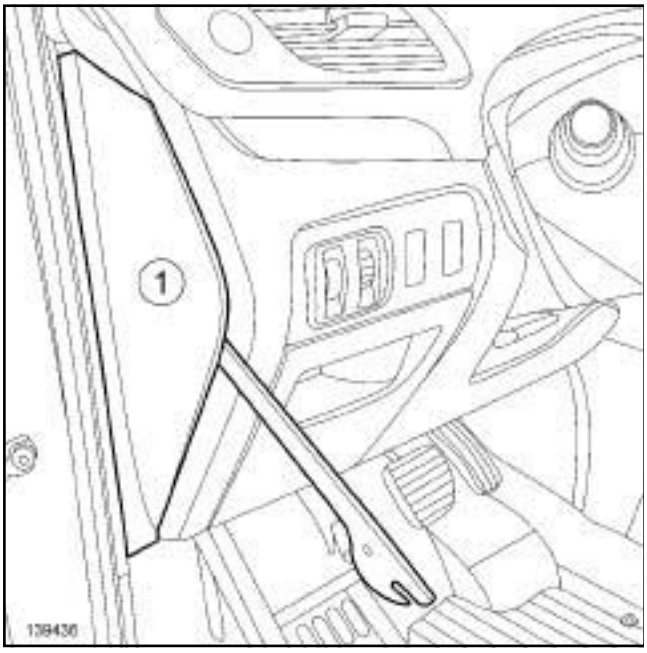

139436

❑ Unclip the side panel (**1**) using the tool **(Car. 1363)**.

II - OPERATION FOR REMOVAL OF PART CONCERNED

B95 or D95

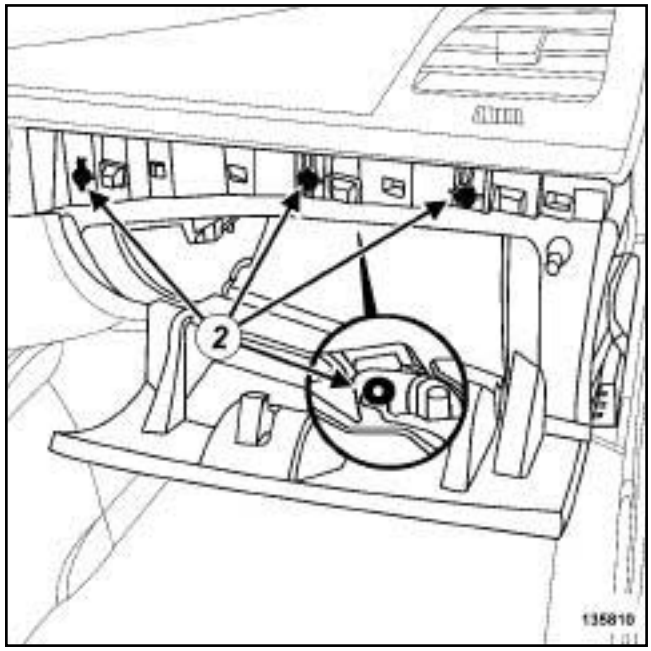

135810

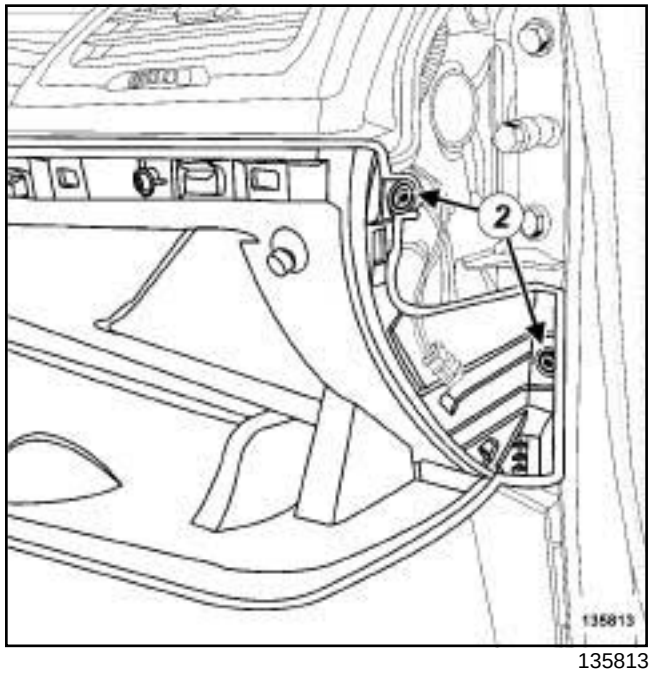

135813

❑ Remove the glovebox bolts (**2**) .

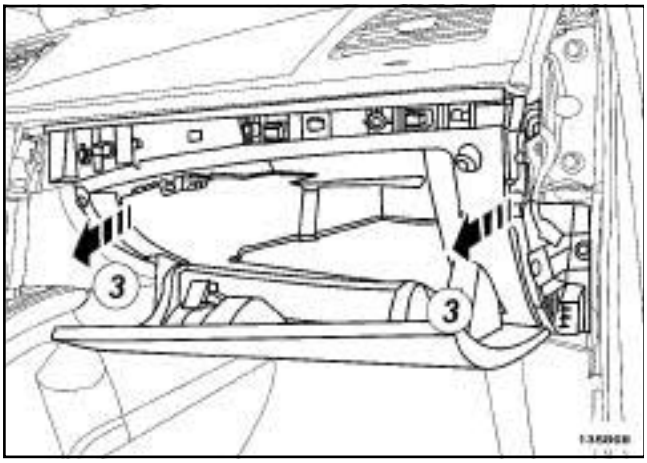

135808

❑ Unclip the glovebox at (**3**) .

J95

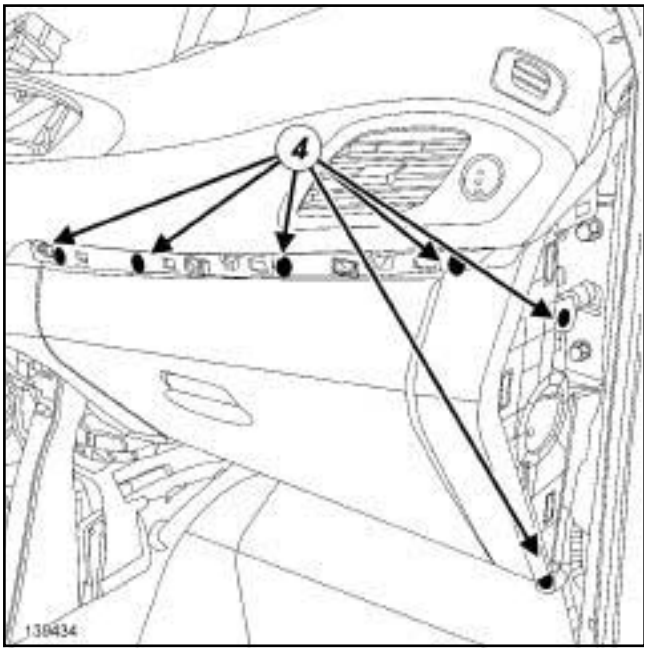

139434

❑ Remove:

- the bolts (**4**) ,
- the glovebox.

REFITTING

I - REFITTING OPERATION FOR PART CONCERNED

❑ Refit:

- the glovebox,
- the glovebox bolts.

II - FINAL OPERATION

RIGHT-HAND DRIVE

❑ Clip on the side panel ***(1)*** .

LEFT-HAND DRIVE

❑ Refit the inhibitor switch (see **Inhibitor switch: Removal - Refitting**) (88C, Airbags and pretensioners)

❑ Refit:

- the front side door seal,
- the storage compartment light (see **Glovebox light: Removal - Refitting**) (81B, Interior lighting),
- the dashboard trim piece (see **57A**, **Interior equipment**, **Dashboard trim: Removal - Refitting**, page **57A-15**) .

REMOVAL

I - REMOVAL PREPARATION OPERATION

❑ Remove:

- the storage compartment light (see **Glovebox light: Removal - Refitting**) (81B, Interior lighting),
- the glovebox (see **57A**, **Interior equipment**, **Glovebox: Removal - Refitting**, page **57A-25**) .

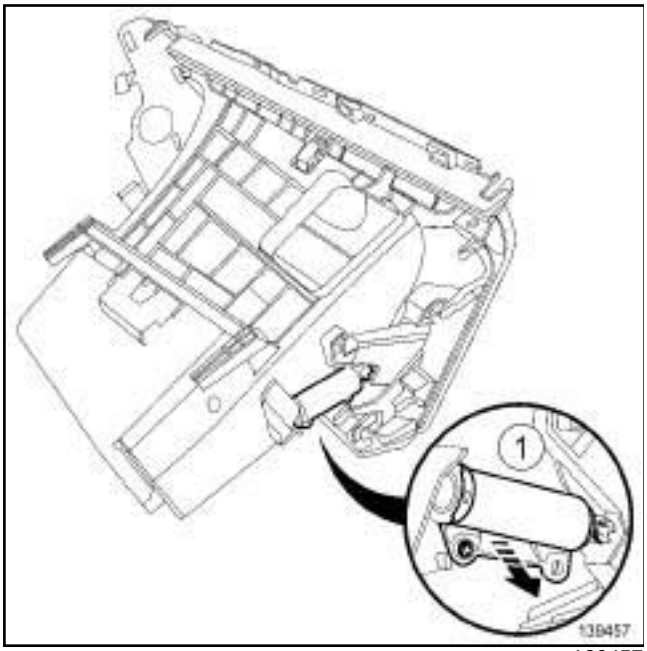

139457

❑ Unclip the jack (**1**) .

II - OPERATION FOR REMOVAL OF PART CONCERNED

B95 or D95

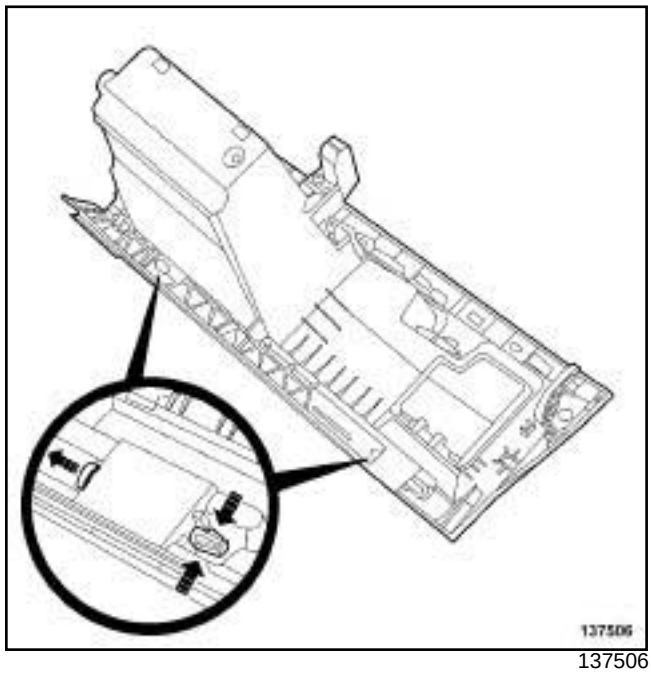

137506

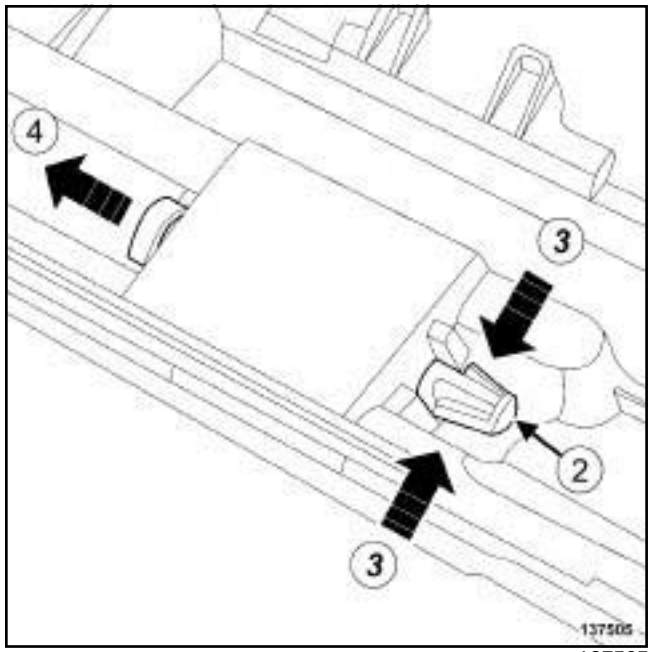

137505

❑ Remove the glovebox cover shafts (**2**) by pressing on the clips at (**3**) .

❑ Remove:

- the glovebox cover shafts at (**4**) ,
- the glovebox cover.

J95

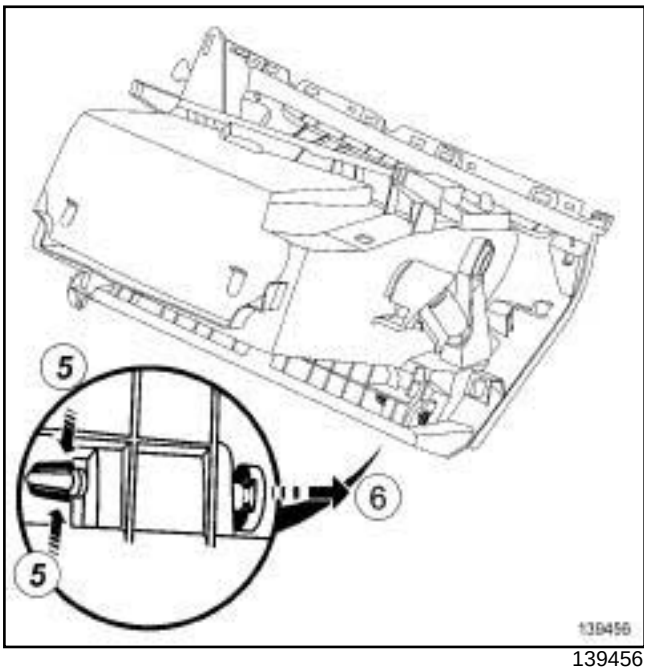

139456

- Remove the shafts by pressing on the clips at (**5**) .
- Remove:
  - the shafts at (**6**) ,
  - the glovebox cover.

REFITTING

I - REFITTING OPERATION FOR PART CONCERNED

- Refit the glovebox cover.
- Clip the glovebox cover shafts in place.

II - FINAL OPERATION

- Clip the jack **(1)** in place.
- Refit:
  - the glovebox (see **57A**, **Interior equipment**, **Glovebox: Removal - Refitting**, page **57A-25**) ,
  - the storage compartment light (see **Glovebox light: Removal - Refitting**) (81B, Interior lighting).

B95 or D95

Essential special tooling	
Car. 1363	Set of trim removal levers.

REMOVAL

I - REMOVAL PREPARATION OPERATION

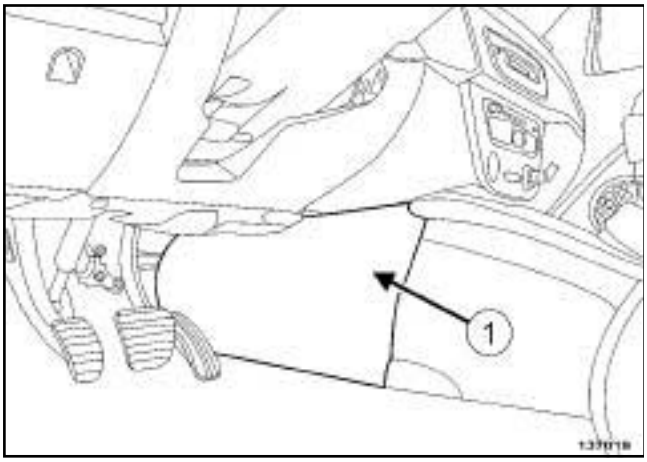

137019

❑ Unclip the centre console side panels (**1**) using the tool **(Car. 1363)**.

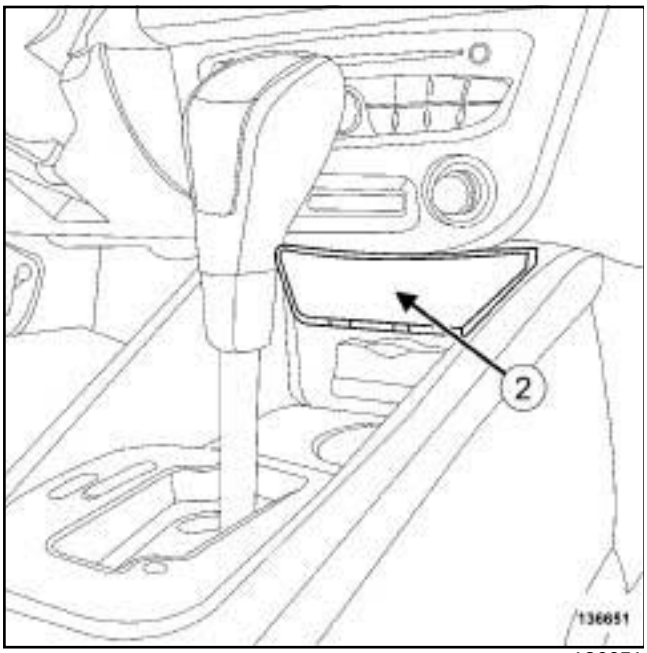

136651

❑ Unclip the diagnostic socket flap (**2**) .

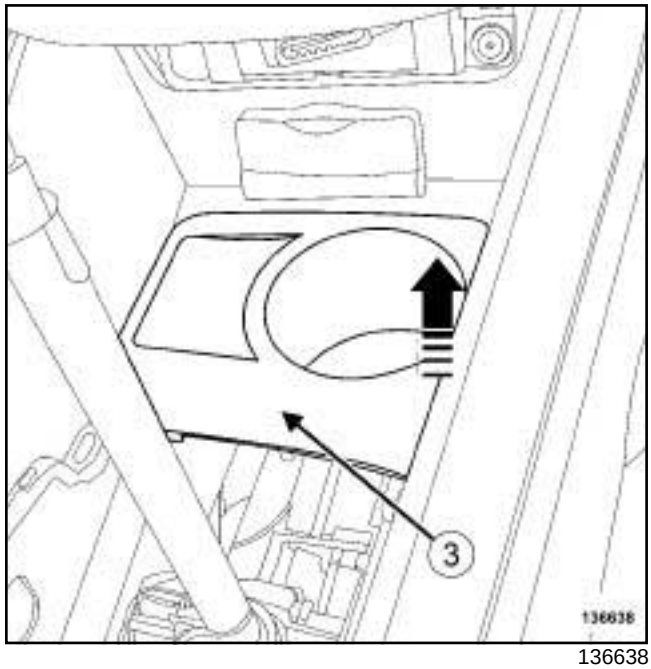

136638

❑ Unclip the cup holder (**3**) .

5 SPEED MANUAL GBOX or 6 SPEED MANUAL GBOX

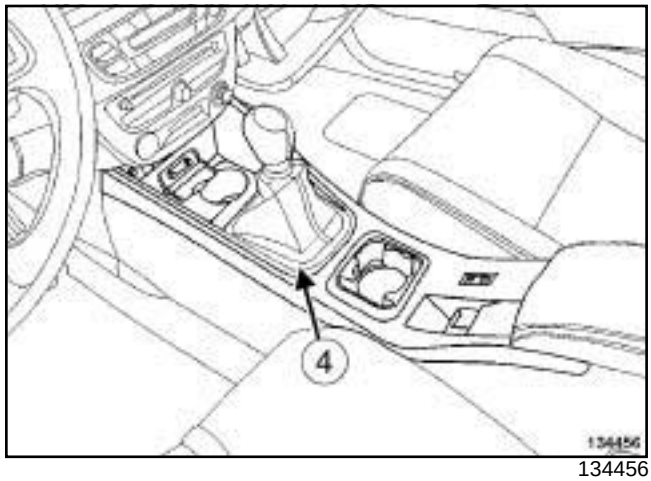

134456

❑ Unclip the gear lever trim (**4**) using the tool **(Car. 1363)**.

B95 or D95

6 SPEED AUTO GBOX

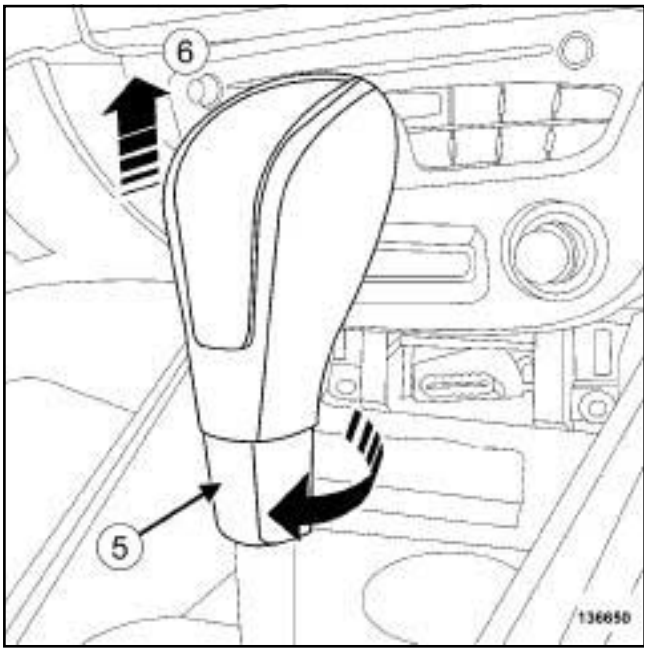

136650

❑ Unlock the gear lever knob by turning the locking ring a quarter of a turn clockwise (**5**) .

❑ Unclip the gear lever knob following (**6**) .

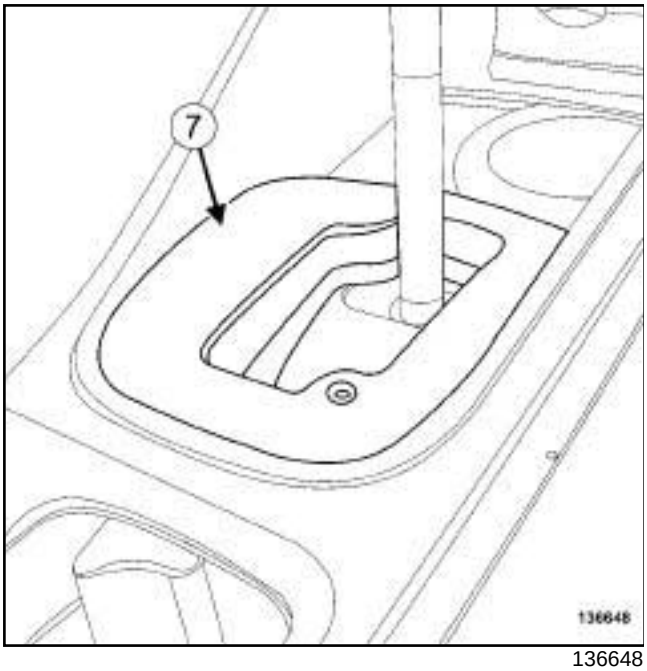

136648

❑ Remove the gear lever trim (**7**) using the tool **(Car. 1363)**.

WITHOUT AUTOMATIC PARKING BRAKE

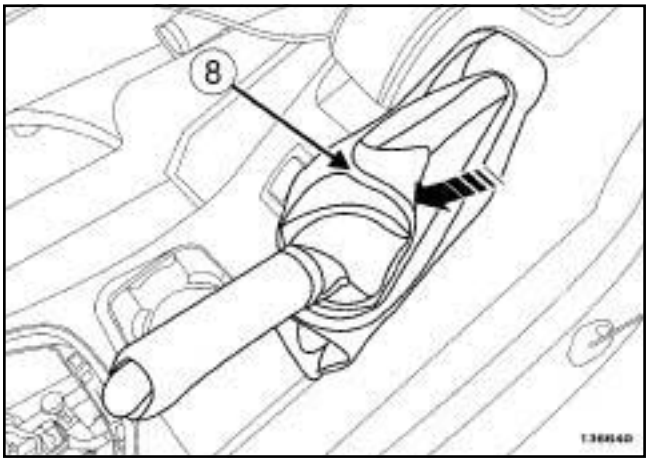

136640

❑ Partially unclip the handbrake lever gaiter (**8**) .

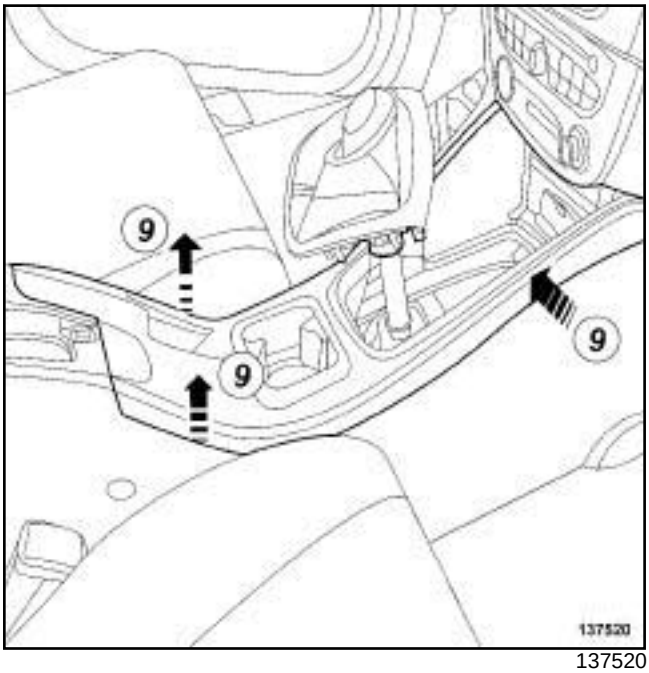

137520

❑ Unclip the centre console upper front panel following (**9**) using the tool **(Car. 1363)**.

ELECTRONIC PARKING BRAKE

❑ Disconnect the electronic parking brake switch (see **Handle: Removal - Refitting**) (37B, Electronic parking brake).

B95 or D95

CRUISE CONTROL

❑ Disconnect the cruise control switch (see **Switch: Removal - Refitting**) (83D, Cruise control).

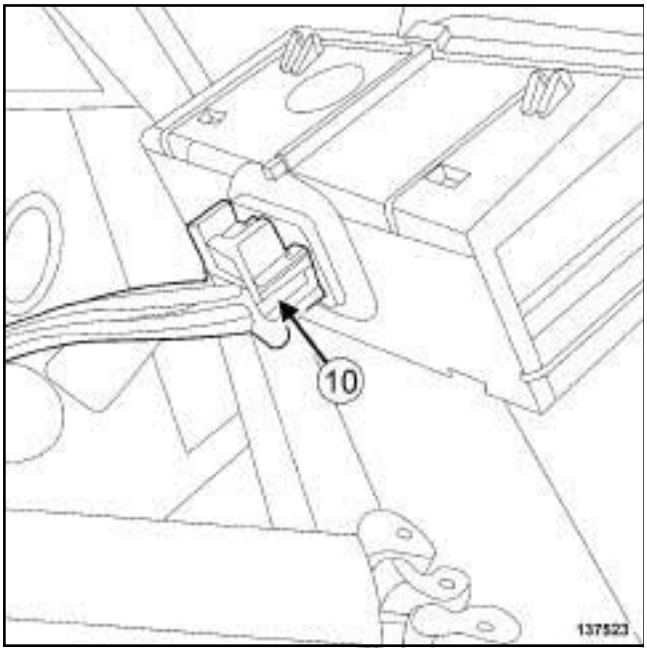

137523

❑ Disconnect the offset audio socket connector (**10**) .

RADIO NO 07

❑ Disconnect the navigation central control (see **Central control: Removal - Refitting**) (83C, On-board telematics system).

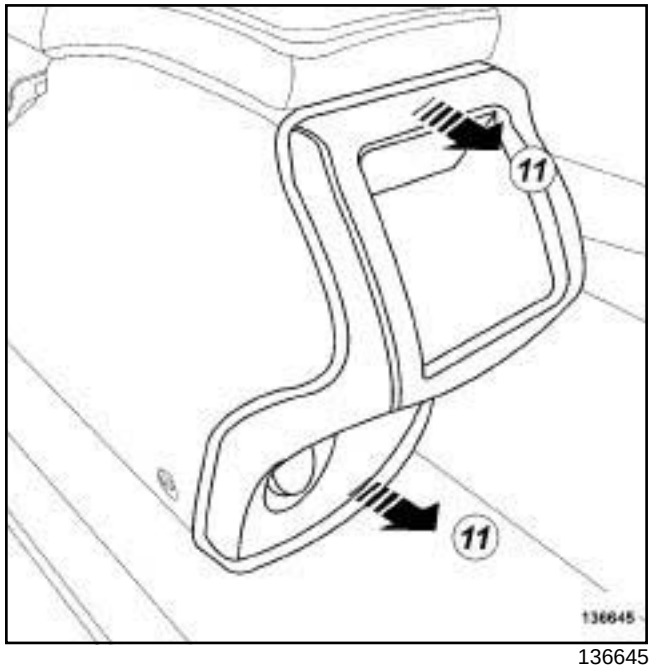

136645

❑ Unclip the centre console rear panel following (**11**) using the tool **(Car. 1363)**.

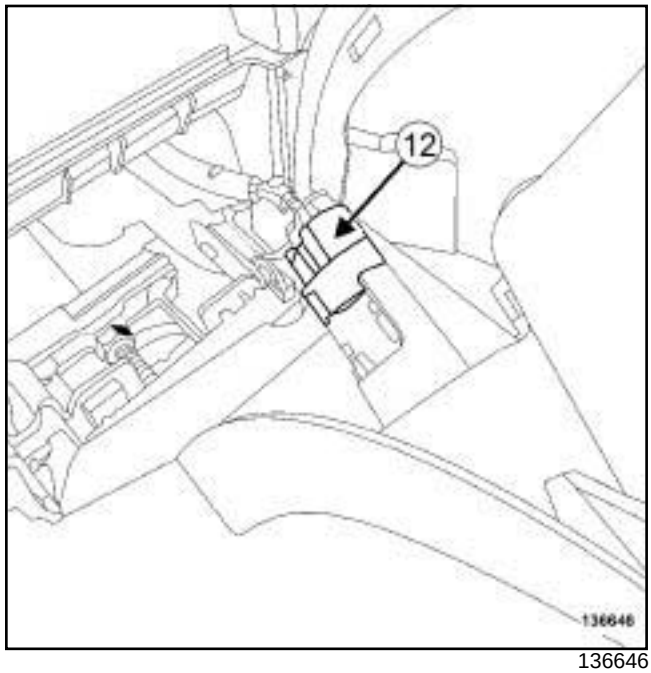

136646

❑ Disconnect the electrical accessories socket connector (**12**) .

B95 or D95

II - OPERATION FOR REMOVAL OF PART CONCERNED

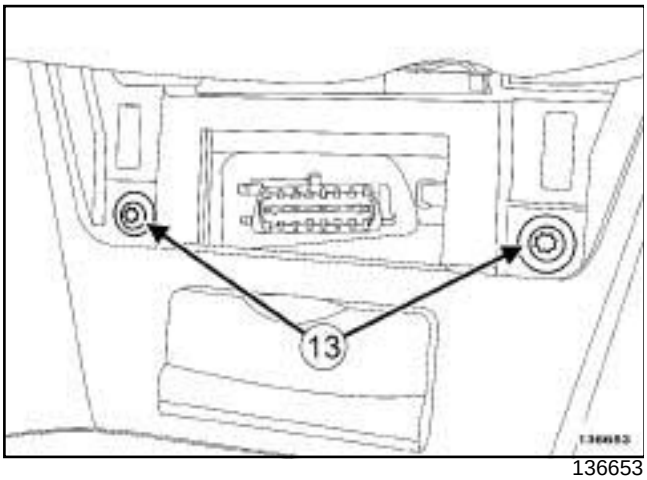

136653

❑ Remove the front bolts (**13**) from the centre console.

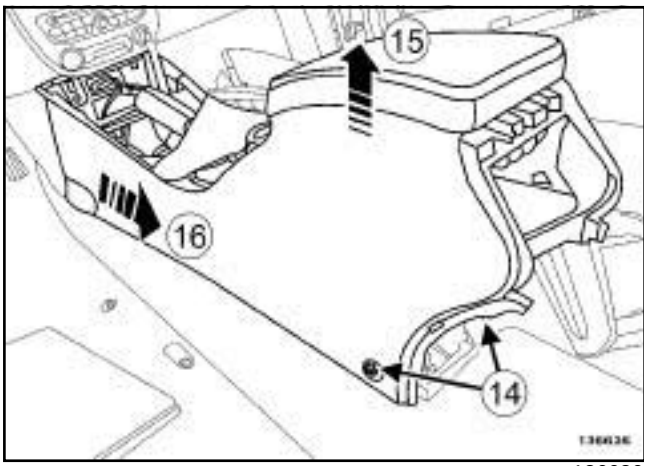

136636

❑ Remove the rear bolts (**14**) from the centre console.

❑ Remove the centre console at (**15**) then at (**16**) .

REFITTING

I - REFITTING OPERATION FOR PART CONCERNED

❑ Refit the centre console.

❑ Refit the centre console bolts ***(13)*** , ***(14)*** .

II - FINAL OPERATION

❑ Connect the electrical accessories socket connector.

❑ Clip the centre console rear panel in place.

RADIO NO 07

❑ Connect the navigation central control (see **Central control: Removal - Refitting**) (83C, On-board telematics system).

❑ Connect the connector of the offset audio socket.

CRUISE CONTROL

❑ Connect the cruise control switch (see **Switch: Removal - Refitting**) (83D, Cruise control).

ELECTRONIC PARKING BRAKE

❑ Connect the electronic parking brake switch (see **Handle: Removal - Refitting**) (37B, Electronic parking brake).

❑ Clip the upper front panel onto the centre console.

WITHOUT AUTOMATIC PARKING BRAKE

❑ Clip the handbrake lever gaiter.

❑ Clip the cup holder.

6 SPEED AUTO GBOX

❑ Clip on the gear lever trim piece.

❑ Refit the gear lever knob.

❑ Lock the gear lever knob.

5 SPEED MANUAL GBOX or 6 SPEED MANUAL GBOX

❑ Clip on the gear lever trim.

❑ Clip:

- the diagnostic socket flap,

B95 or D95

- the centre console side panels.

❑ Carry out a function test on all functions.

J95

Essential special tooling	
Car. 1363	Set of trim removal levers.

REMOVAL

I - REMOVAL PREPARATION OPERATION

Centre console fixed section

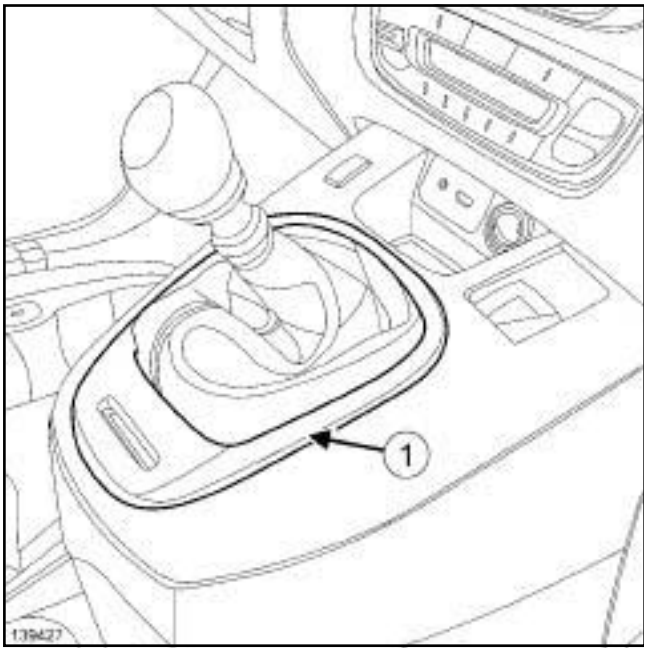

139427

❑ Unclip the trim (**1**) .

5 SPEED MANUAL GBOX or 6 SPEED MANUAL GBOX

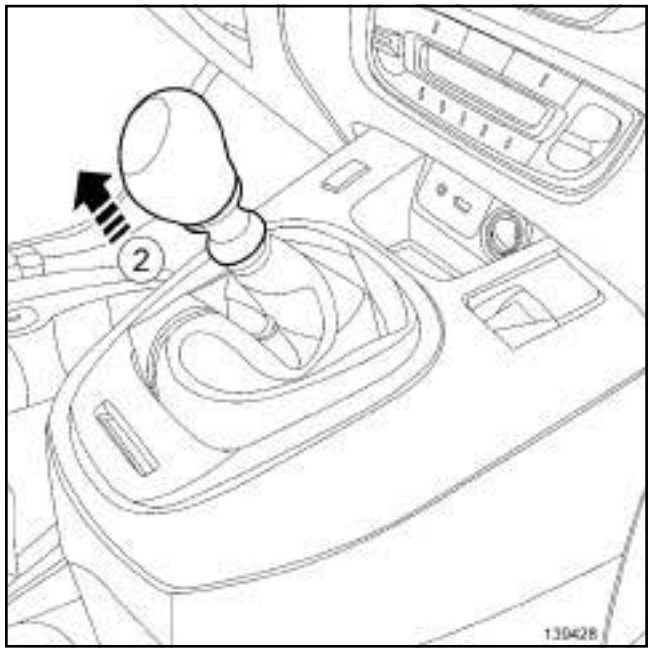

139428

❑ Remove:

- the gear lever knob at (**2**) ,
- the gear lever spring,
- the gear lever gaiter.

J95

6 SPEED AUTO GBOX

141380

❑ Remove:

- the gear lever knob at (**2**) ,
- the gear lever gaiter.

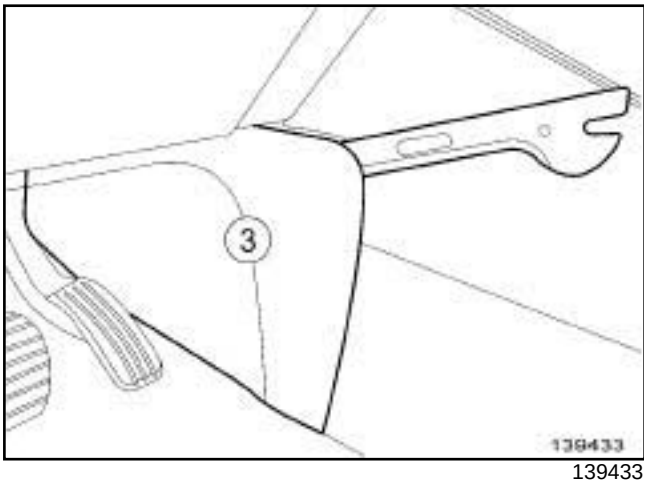

139433

❑ Remove the side panels (**3**) of the centre console using the tool **(Car. 1363)**.

FIXED CENTRE CONSOLE WITH STORAGE

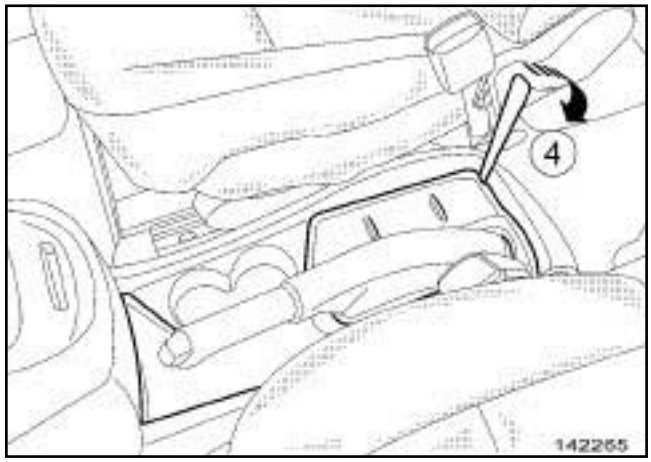

142265

❑ Remove the carpet from the fixed centre console using the tool **(Car. 1363)** at (**4**) .

SLIDING CENTRE CONSOLE WITH STORAGE

Centre console sliding section

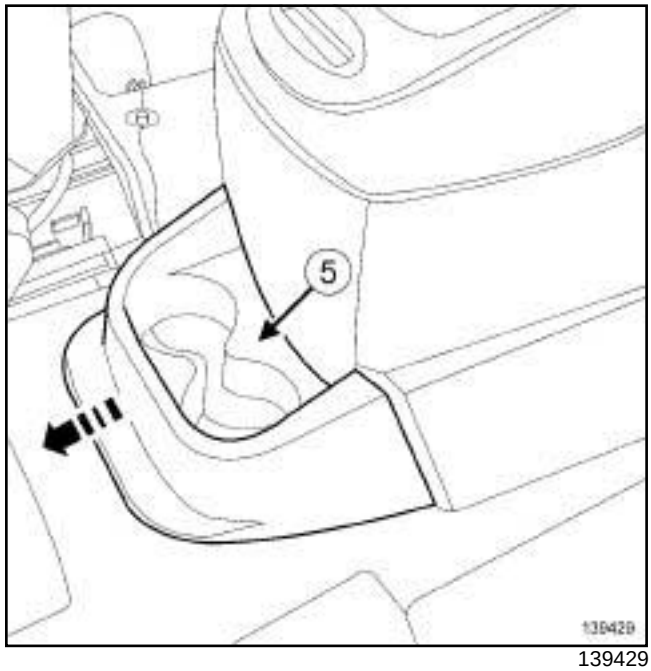

139429

❑ Remove the cup holder (**5**) .

❑ Move the front seats forward.

❑ Push back the centre sliding console.

J95

II - OPERATION FOR REMOVAL OF PART CONCERNED

Centre console fixed section

FIXED CENTRE CONSOLE WITH STORAGE

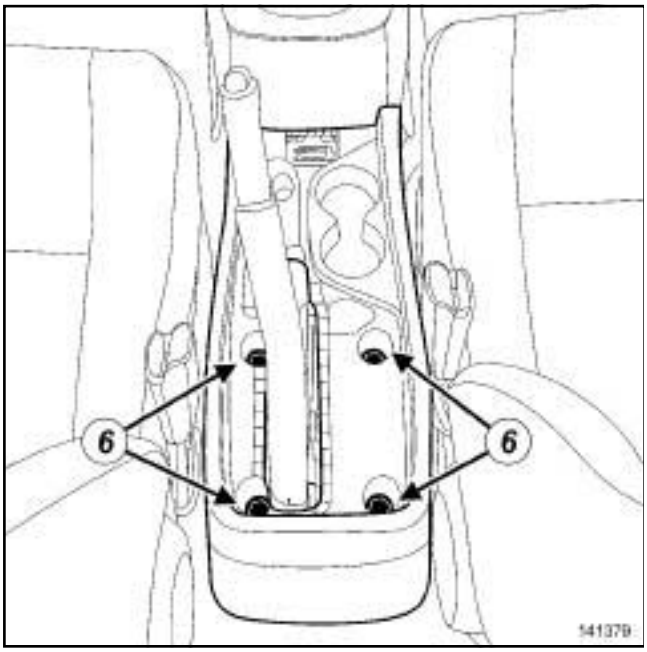

141379

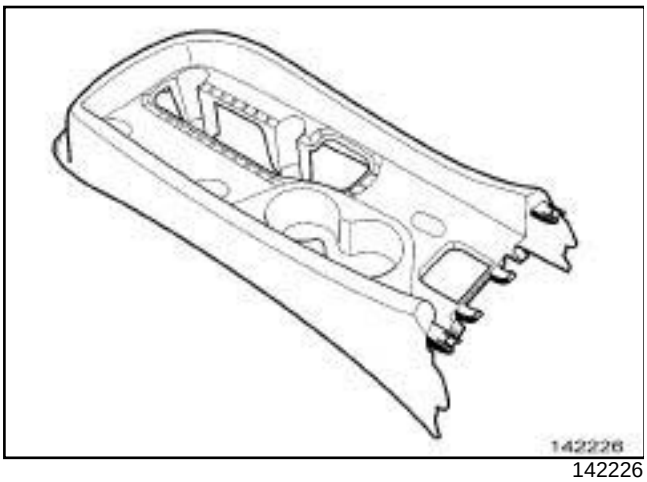

142226

❑ Remove:

- the nuts of the fixed centre console (**6**) ,
- the fixed centre console.

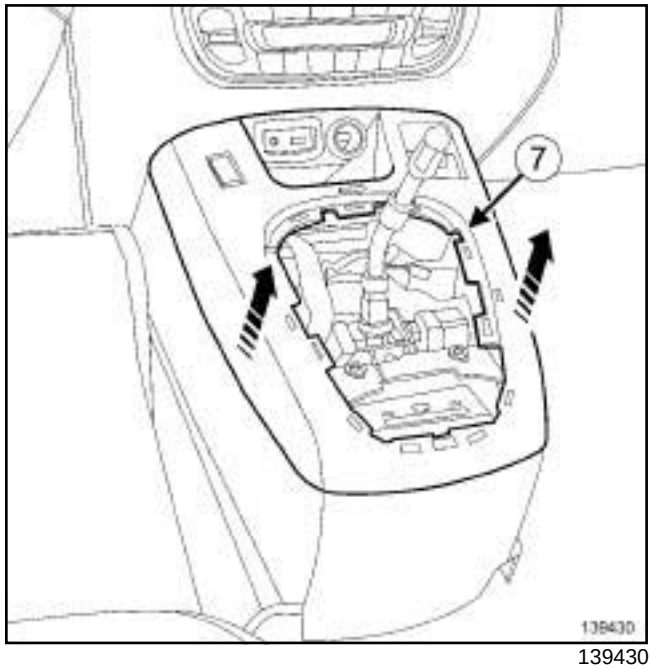

139430

❑ Partially unclip the centre console upper trim (**7**) .

CRUISE CONTROL

❑ Disconnect the cruise control switch connector.

ELECTRONIC PARKING BRAKE

❑ Disconnect the electric parking brake switch connector.

WITH ACCESS. FOR SMOKING

❑ Disconnect the cigarette lighter connector.

RADIO NO 01 or RADIO NO 02 or RADIO NO 03

❑ Disconnect the offset multimedia socket connector.

J95

RADIO NO 04 or RADIO NO 05

❑ Disconnect the offset multimedia socket connectors.

❑ Remove the upper trim from the centre console.

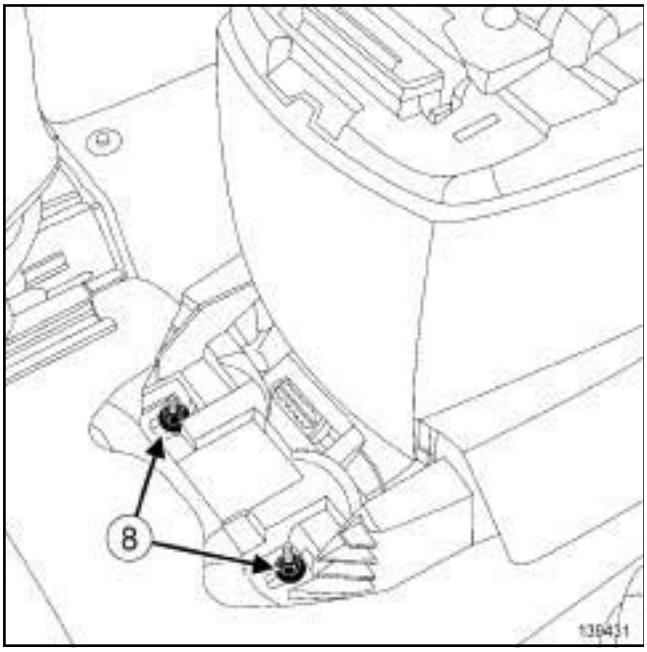

139431

❑ Remove nuts (**8**) .

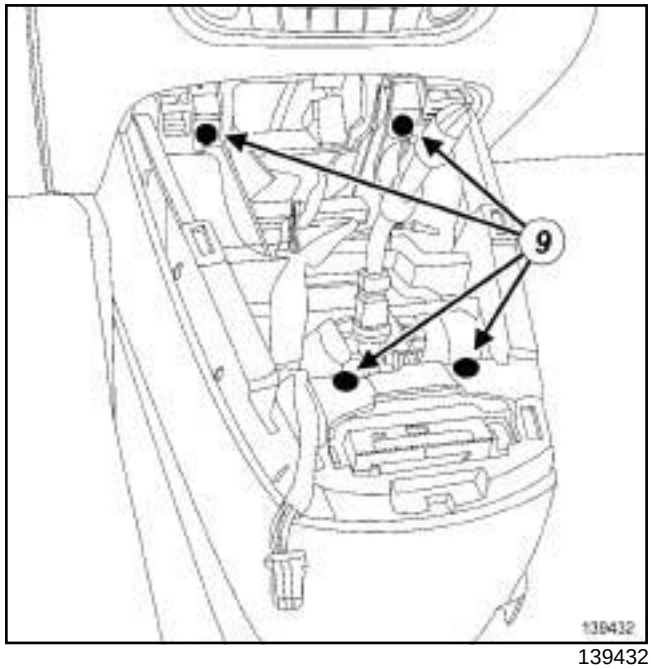

139432

❑ Remove:

- the card reader (see **Card reader: Removal - Refitting**) (82A, Immobiliser),
- the bolts (**9**) ,
- the centre console.

Note:

Mark the position of the various wiring before removing the centre console.

SLIDING CENTRE CONSOLE WITH STORAGE

Centre console sliding section

❑ Put the front seats in the forward position.

❑ In the event of a fault in the slide mechanism, remove the front seats.

J95

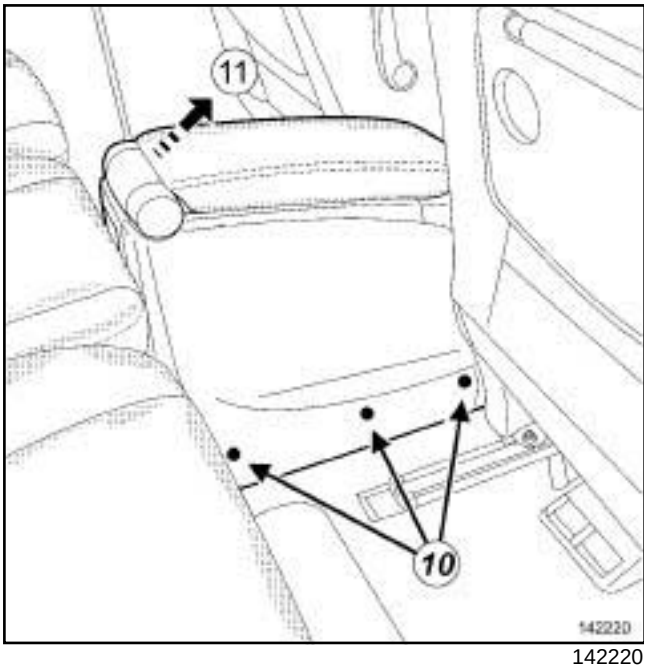

142220

- Remove the bolts (**10**) from the sliding centre console.
- Lift the sliding centre console at (**11**) .

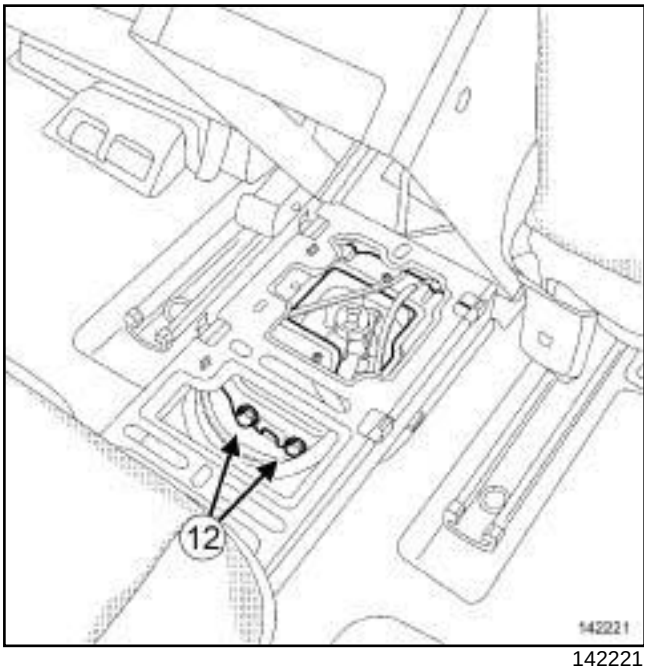

142221

- Remove the bolts (**12**) from the sliding centre console slide.

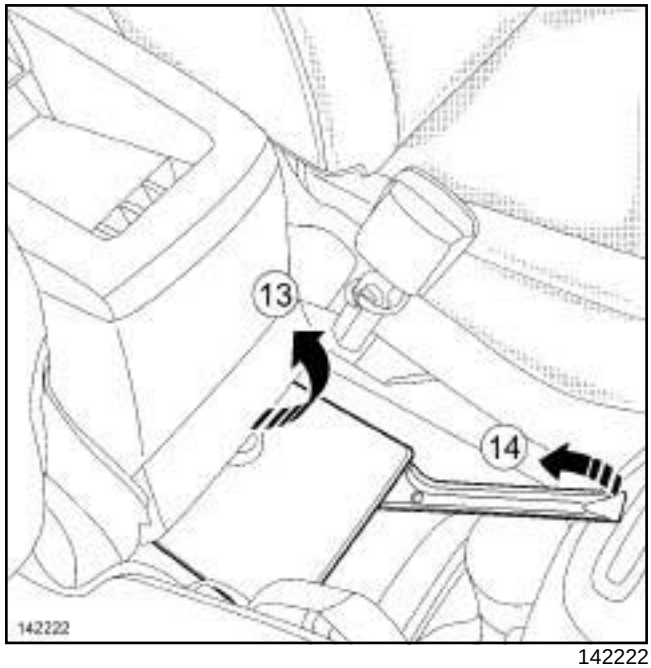

142222

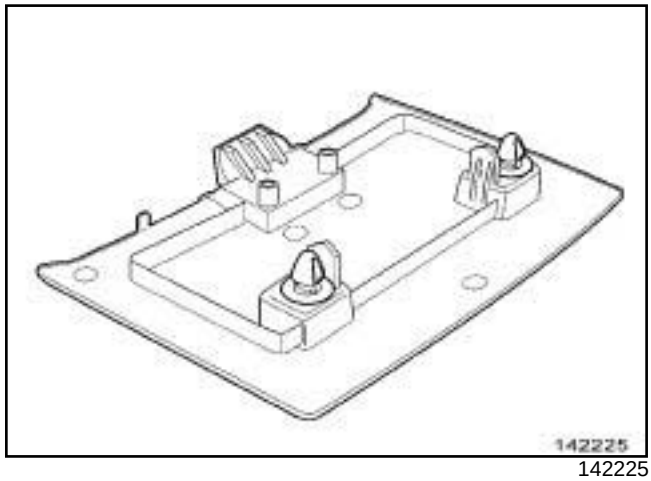

142225

- Lift the sliding centre console at (**13**) .
- Remove the front cover of the sliding centre console using the tool **(Car. 1363)** at (**14**) .

J95

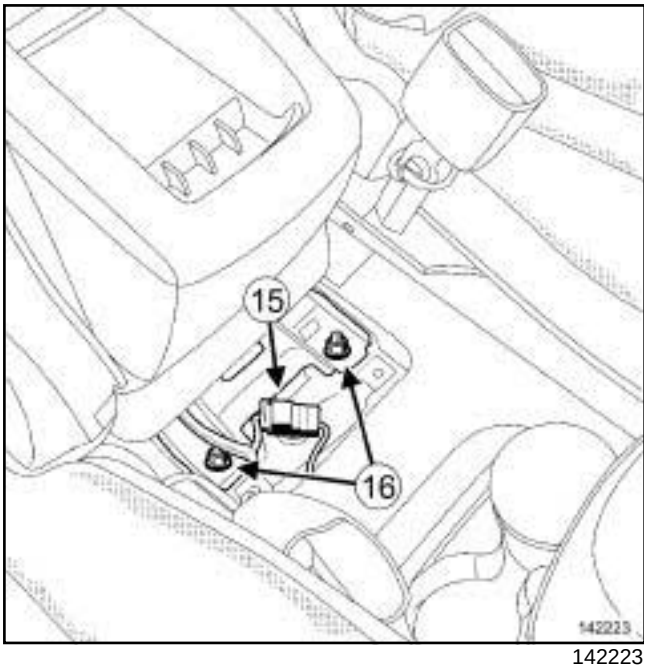

142223

❑ Unclip the connector (**15**) from the sliding centre console.

❑ Disconnect the connector (**15**) from the sliding centre console.

❑ Remove:

- the nuts (**16**) of the sliding centre console slide,
- the « sliding centre console - sliding centre console slide » assembly.

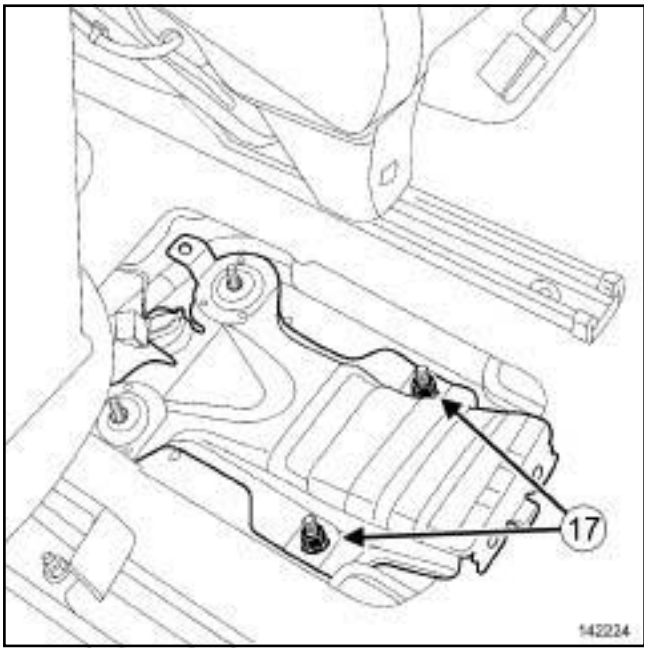

142224

❑ Remove:

- the nuts (**17**) from the slide mounting of the sliding centre console,
- the slide mounting of the sliding centre console.

REFITTING

I - REFITTING OPERATION FOR PART CONCERNED

SLIDING CENTRE CONSOLE WITH STORAGE

Centre console sliding section

❑ Refit:

- the slide mounting of the sliding centre console,
- the « sliding centre console - sliding centre console slide » assembly.

❑ Connect the connector of the sliding centre console.

❑ Clip on the connector of the sliding centre console.

❑ Refit the front cover on the sliding centre console.

Centre console fixed section

❑ Refit:

- the centre console,
- the card reader (see **Card reader: Removal - Refitting**) (82A, Immobiliser).

RADIO NO 01 or RADIO NO 02 or RADIO NO 03

❑ Connect the offset multimedia socket connector.

RADIO NO 04 or RADIO NO 05

❑ Connect the offset multimedia socket connectors.

WITH ACCESS. FOR SMOKING

❑ Connect the cigarette lighter connector.

J95

ELECTRONIC PARKING BRAKE

❏ Connect the electric parking brake switch connector.

CRUISE CONTROL

❏ Connect the cruise control switch connector.

❏ Refit the upper trim ***(7)*** .

FIXED CENTRE CONSOLE WITH STORAGE

❏ Refit the fixed centre console.

II - FINAL OPERATION

Centre console fixed section

FIXED CENTRE CONSOLE WITH STORAGE

❏ Refit the carpet of the fixed centre console.

❏ Refit the side panels ***(3)*** .

6 SPEED AUTO GBOX

❏ Refit:

- the gear lever gaiter,
- the gear lever knob.

5 SPEED MANUAL GBOX or 6 SPEED MANUAL GBOX

❏ Refit:

- the gear lever gaiter,
- the gear lever spring,
- the gear lever knob.

❏ Clip the gaiter trim in place ***(1)*** .

❏ Carry out a function test.

SLIDING CENTRE CONSOLE WITH STORAGE

Centre console sliding section

❏ Refit the cup holder.

❏ Reposition:

- the sliding centre console,
- the front seats.

REMOVAL

I - REMOVAL PREPARATION OPERATION

❑ Open the floor storage flap.

II - OPERATION FOR REMOVAL OF PART CONCERNED

137628

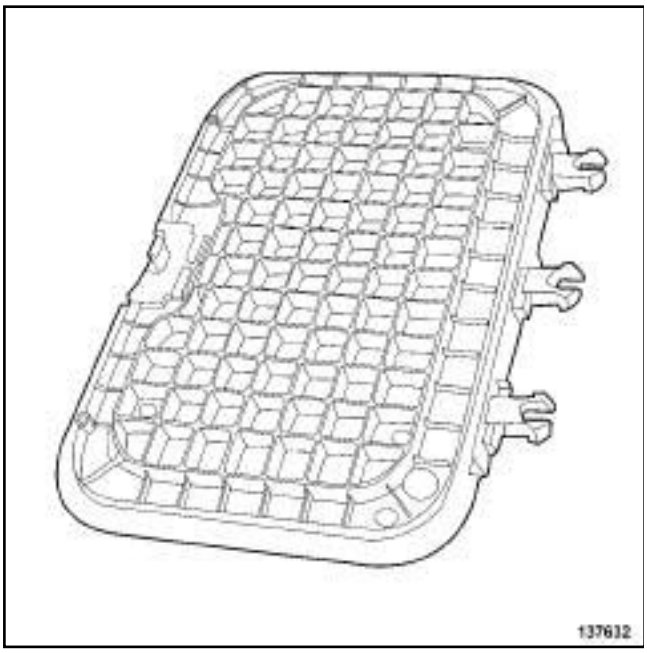

137632

❑ Unclip the front section of the floor storage flap at (**1**)
.

J95

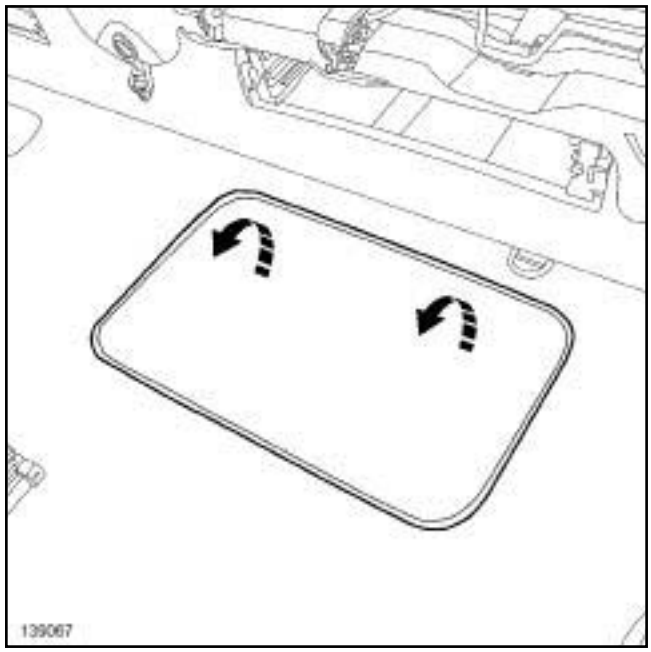

139067

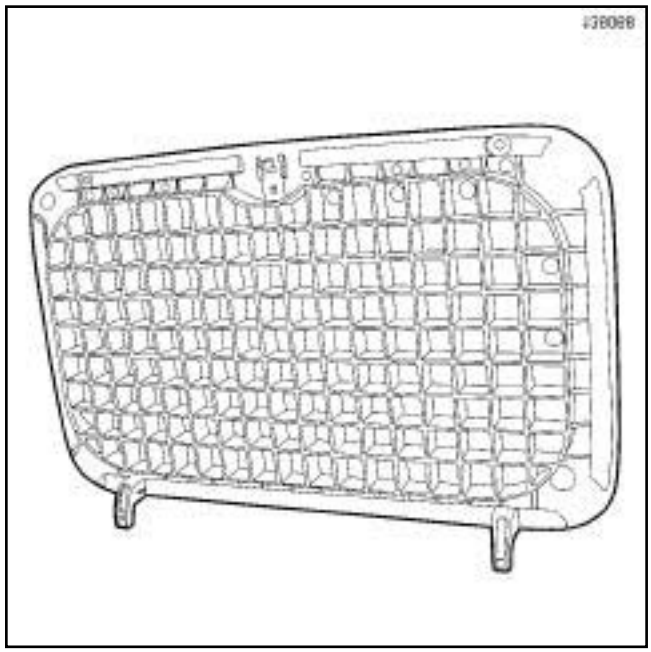

139068

❑ Remove the rear section of the storage flap.

REFITTING

I - REFITTING OPERATION FOR PART CONCERNED

❏ Clip the front section of the floor storage flap in place.

J95

❏ Refit the rear section of the storage flap.

II - FINAL OPERATION

❏ Close the floor storage flap.

Essential special tooling	
Car. 1363	Set of trim removal levers.

REMOVAL

I - REMOVAL PREPARATION OPERATION

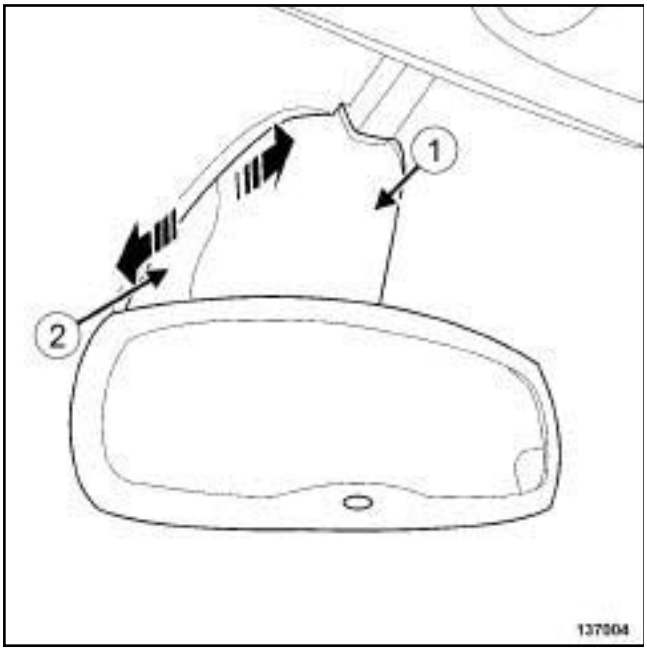

137004

❑ Remove:

- the upper cover (**1**) using the tool **(Car. 1363)**,
- the lower cover (**2**) .

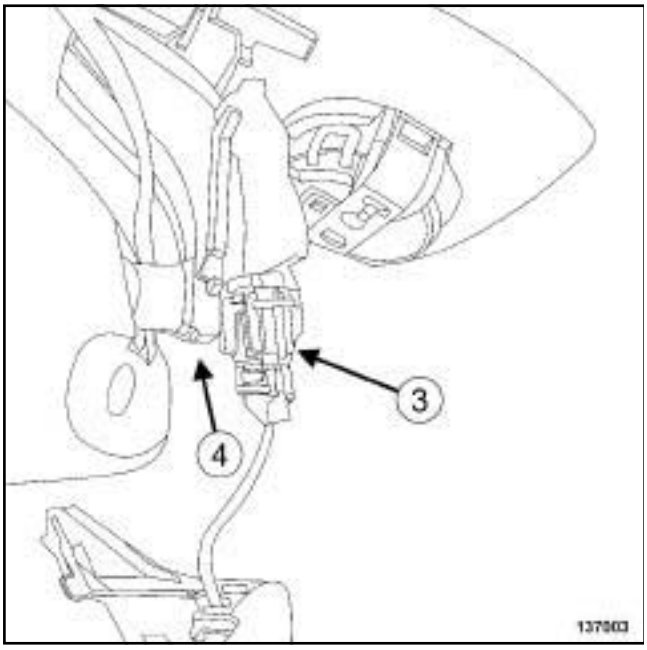

137003

❑ Disconnect the connectors.

EQT LEVEL EA4

❑ Disconnect the interior rear-view mirror connector ***(3)*** .

CLIMATE CONTROL

❑ Disconnect the passenger compartment temperature sensor connector ***(4)*** .

AUTO LIGHTS+WIPER

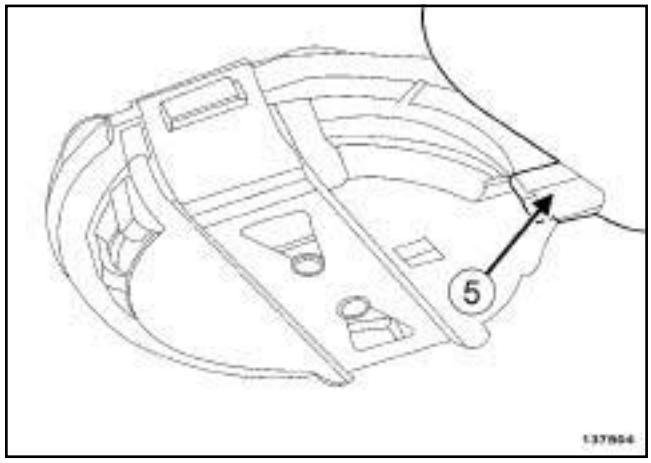

137504

❑ Disconnect the rain and light sensor connector (**5**) .

II - REMOVAL OPERATION FOR PART CONCERNED

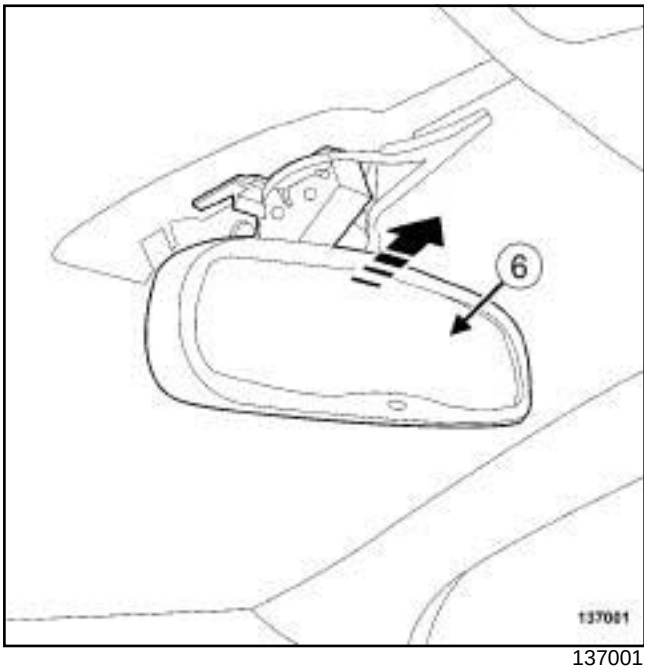

137001

❏ Remove interior rear view mirror (**6**) .

REFITTING

I - REFITTING OPERATION FOR PART CONCERNED

❏ Refit the interior rear-view mirror.

II - FINAL OPERATION

AUTO LIGHTS+WIPER

❏ Connect the rain and light sensor connector.

EQT LEVEL EA4

❏ Disconnect the interior rear-view mirror connector ***(4)*** .

CLIMATE CONTROL

❏ Disconnect the passenger compartment temperature sensor connector ***(3)*** .

❏ Clip:

- the lower cover,
- the upper cover.

Essential special tooling	
Car. 1597	Trim removal lever.
Car. 1363	Set of trim removal levers.

REMOVAL

I - REMOVAL PREPARATION OPERATION

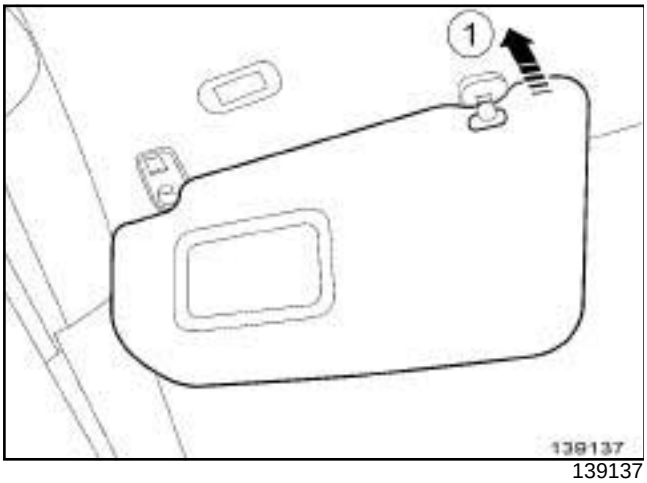

139137

❑ Unclip the sun visor (**1**) from its mounting.

II - OPERATION FOR REMOVAL OF PART CONCERNED

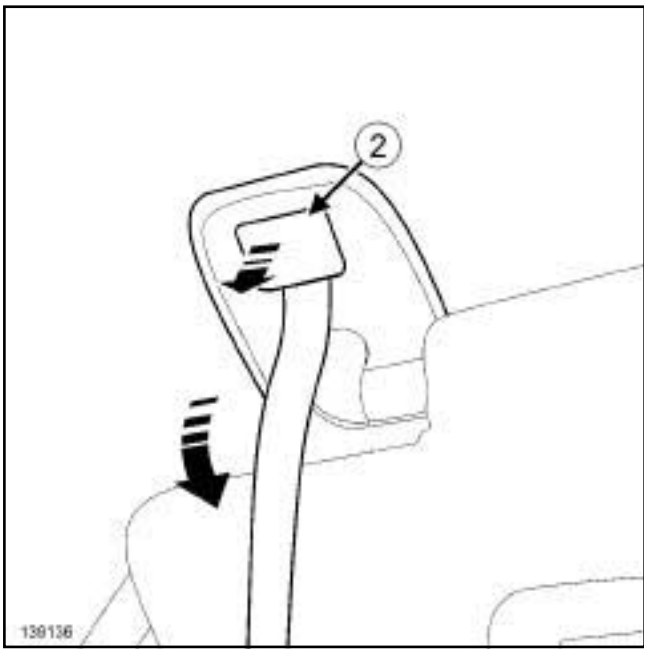

139136

❑ Unclip the locking blanking plug (**2**) using the tool **(Car. 1597)**.

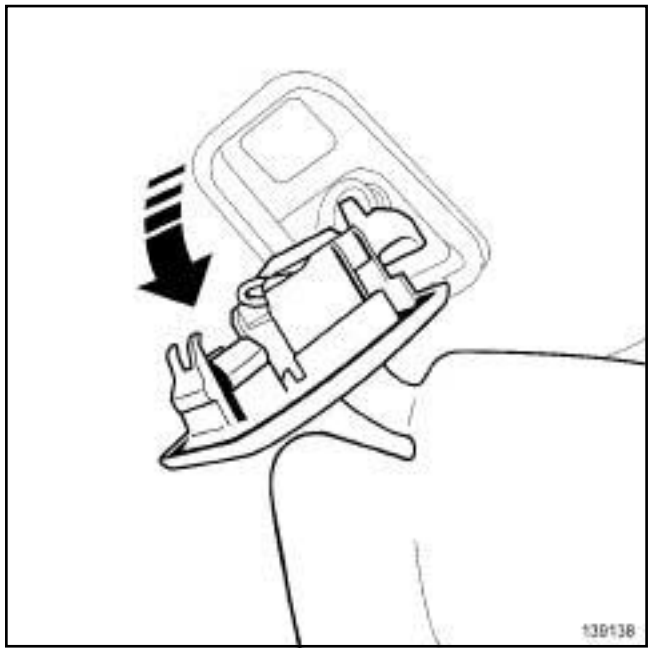

139138

❑ Tilt the sun visor.

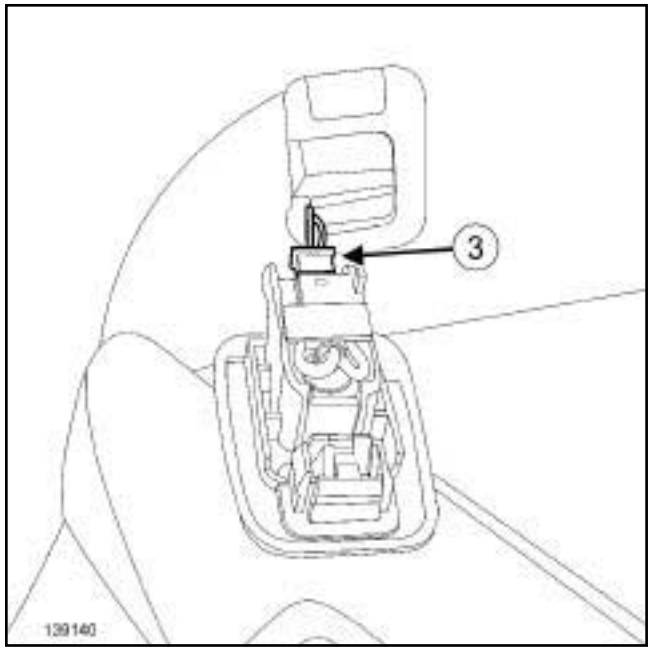

139140

❑ Disconnect the sun visor connector (**3**) .

❑ Remove the sun visor.

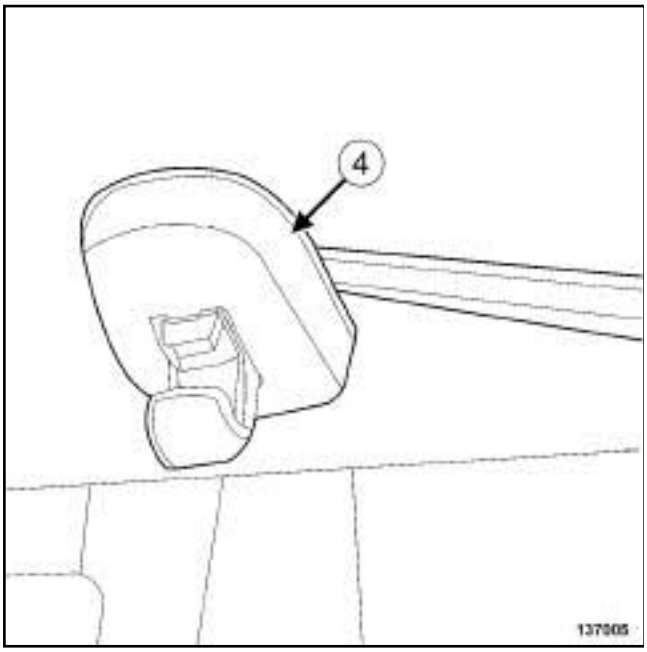

137005

❏ Unclip the trim (**4**) from the mounting using the tool **(Car. 1363)**.

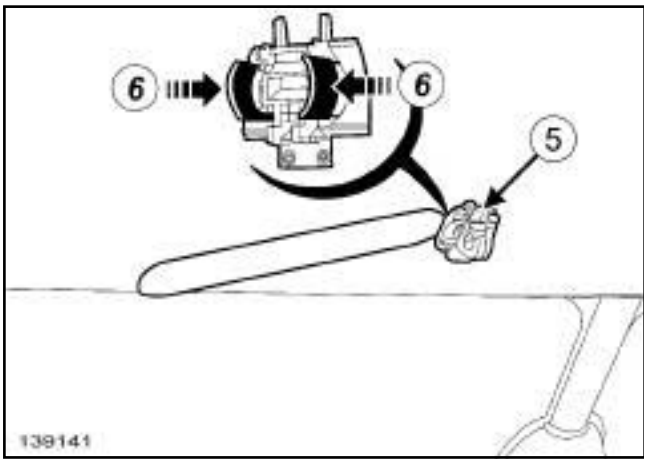

139141

❏ Unclip the sun visor mounting (**5**) using the tool **(Car. 1363)** while pressing on the clips (**6**) .

REFITTING

I - REFITTING OPERATION FOR PART CONCERNED

❏ Clip:

- the central sun visor mounting ***(5)*** .
- the central sun visor mounting trim ***(4)*** .

❏ Connect the sun visor connector ***(3)*** .

❏ Refit the sun visor.

❏ Clip the locking blanking plug in place ***(2)*** .

II - FINAL OPERATION

❏ Clip the sun visor onto the sun visor mounting.

❏ Carry out a function test.

B95 or D95 or E95 or J95 or K95

Essential special tooling	
Car. 1597	Trim removal lever.

REMOVAL

OPERATION FOR REMOVAL OF PART CONCERNED

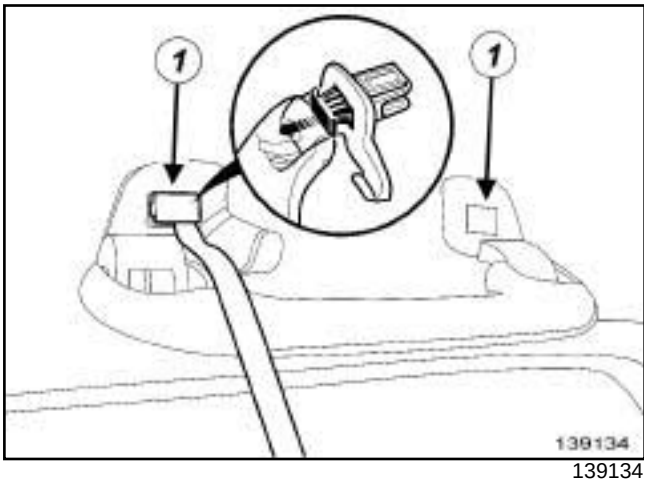

139134

❑ Unclip the locking blanking plugs (**1**) using the tool **(Car. 1597)**.

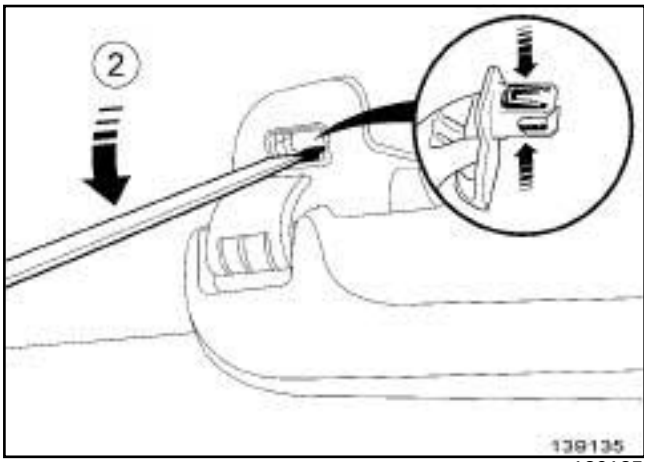

139135

❑ Remove the grab handle by pressing on the clips using a screwdriver at (**2**) .

REFITTING

REFITTING OPERATION FOR PART CONCERNED

❑ Clip on the grab handle.

❑ Refit the locking blanking plugs.

J95

REMOVAL

I - REMOVAL PREPARATION OPERATION

❑ Remove the rear side door trim (see **Rear side door trim: Removal - Refitting**) (72A, Side opening element trim).

II - OPERATION FOR REMOVAL OF PART CONCERNED

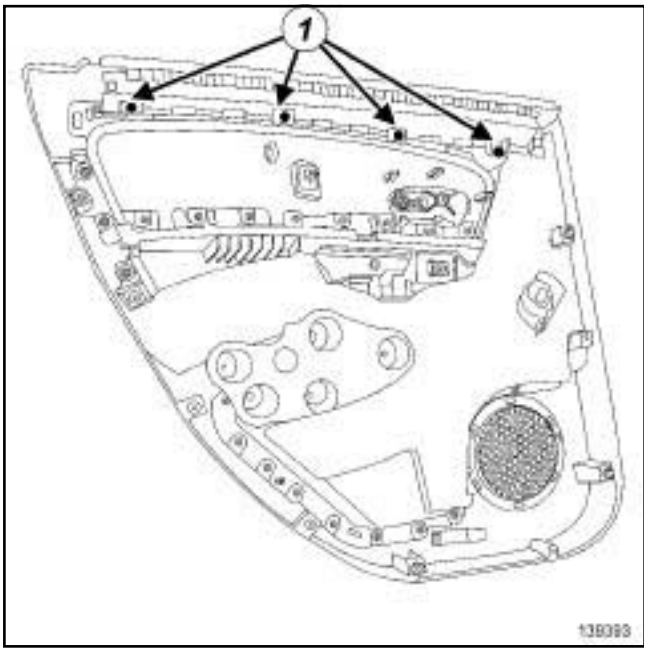

139393

❑ Remove the bolts (**1**) .

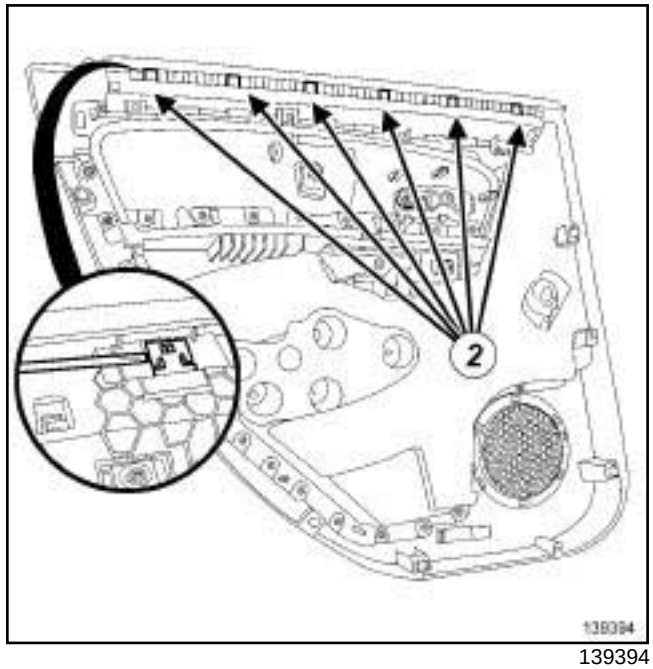

139394

❑ Unclip the clips (**2**) using a flat-blade screwdriver.

❑ Remove the rear side door sun visor.

REFITTING

I - REFITTING OPERATION FOR PART CONCERNED

❑ Refit the rear side door sun visor.

❑ Attach the clips.

❑ Refit the bolts ***(1)*** .

II - FINAL OPERATION

❑ Refit the rear side door trim (see **Rear side door trim: Removal - Refitting**) (72A, Side opening element trim).

J95

REMOVAL

I - REMOVAL PREPARATION OPERATION

❏ Move the front seat forwards as far as possible.

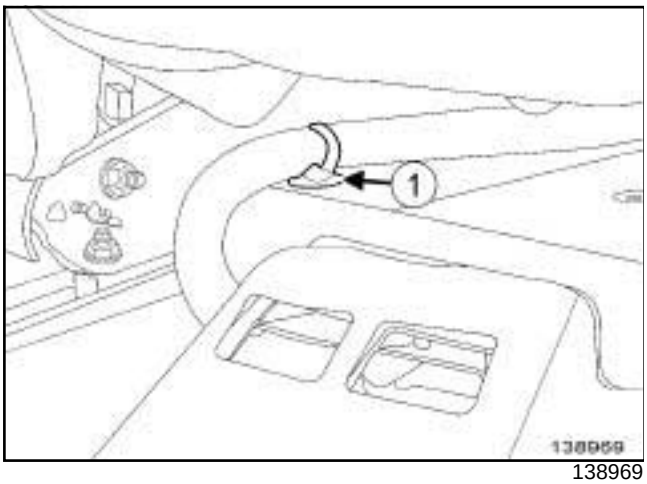

138969

❏ Unclip the retaining clip (**1**) from the front passenger seat wiring.

❏ Move the front seat as far back as possible.

II - OPERATION FOR REMOVAL OF PART CONCERNED

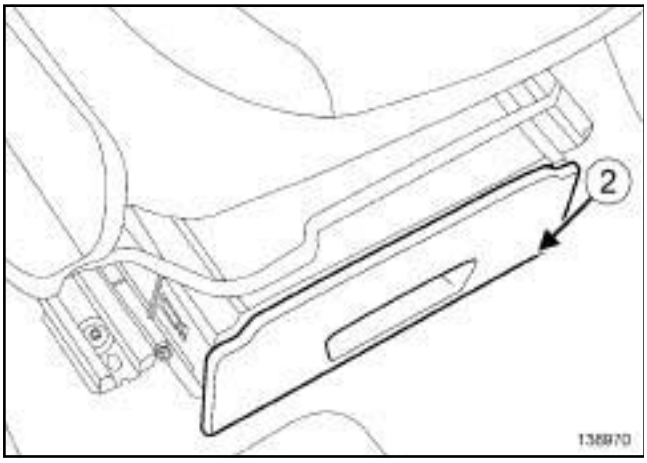

138970

❏ Remove the under-seat storage compartment flap (**2**) .

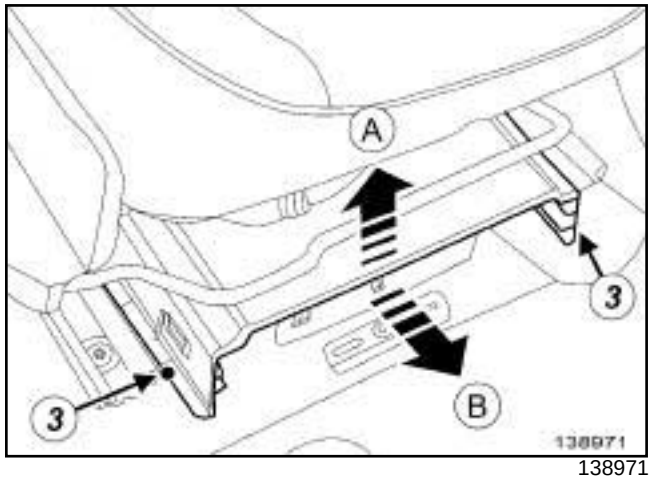

138971

❏ Remove:

- the under-seat storage compartment bolts (**3**) ,
- the under-seat storage compartment by lifting it at (**A**) and then pulling it toward the front of the vehicle (**B**) .

❏ Move the seat as far forward as possible.

REFITTING

I - REFITTING OPERATION FOR PART CONCERNED

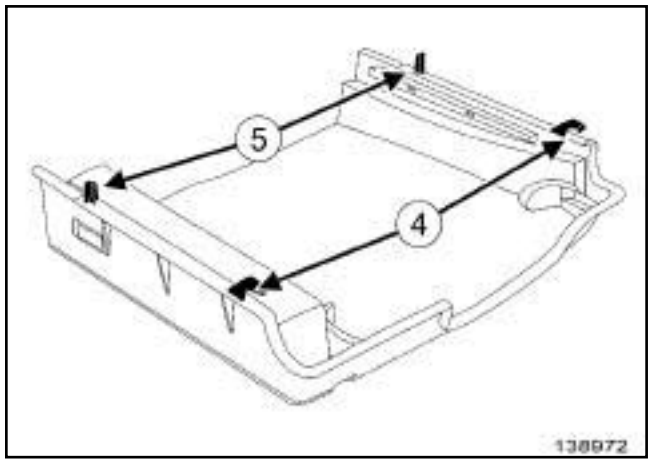

138972

❏ Refit the under-seat storage compartment.

> Note:
>
> When refitting the under-seat storage compartment, be sure to:
>
> - correctly slide the guides ***(4)*** in the lugs provided,
> - position the centring pins ***(5)*** in the centring holes.

J95

- Refit:
  - the bolts ***(3)*** ,
  - the under-seat storage compartment flap ***(2)*** .

II - FINAL OPERATION

- Engage clip ***(1)*** .
- Put the seat in its original position.

IMPORTANT

To ensure the pyrotechnic components operate correctly:

- do not bend the passenger presence sensor pad,
- do not apply glue or adhesive to the passenger presence sensor pad or to the seat cushion trim.

REMOVAL

I - REMOVAL PREPARATION OPERATION

❑ Remove:

- the front headrest (see **Front headrest: Removal - Refitting**) ,
- the complete front seat (see **Complete front seat: Removal - Refitting**) (75A, Front seat frames and seat runners),
- the front seat lower covers (see **Front seat lower cover: Removal - Refitting**) (77A, Front seat trim),
- the front seat base trim (see **Front seat base trim: Removal - Refitting**) (77A, Front seat trim).

II - OPERATION FOR REMOVAL OF PART CONCERNED

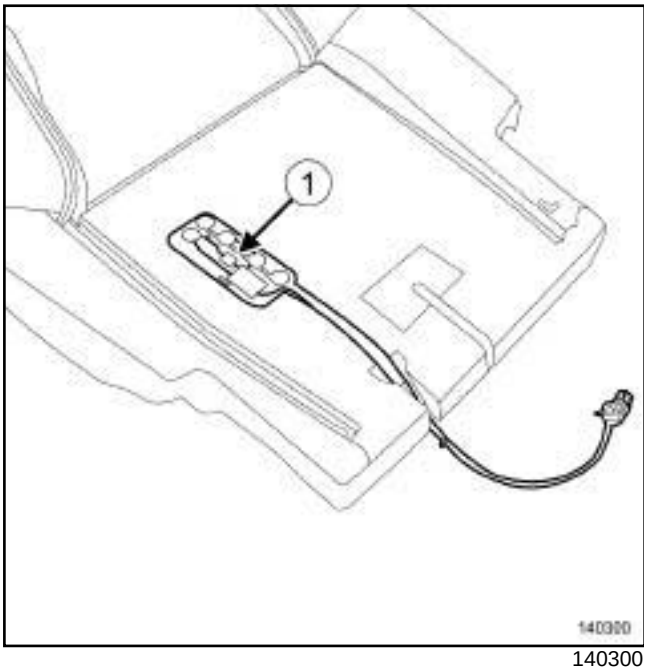

140300

❑ Carefully remove the passenger presence sensor cover (**1**) while holding the foam.

REFITTING

I - REFITTING OPERATION FOR PART CONCERNED

❑ Refit the passenger presence sensor cover.

II - FINAL OPERATION

❑ Refit:

- the front seat base trim (see **Front seat base trim: Removal - Refitting**) (77A, Front seat trim),
- the front seat lower covers (see **Front seat lower cover: Removal - Refitting**) (77A, Front seat trim),
- the complete front seat (see **Complete front seat: Removal - Refitting**) (75A, Front seat frames and seat runners),
- the front headrest (see **Front headrest: Removal - Refitting**) .

❑ Connect the battery (see **Battery: Removal - Refitting**) (80A, Battery).

❑ Carry out a function test.